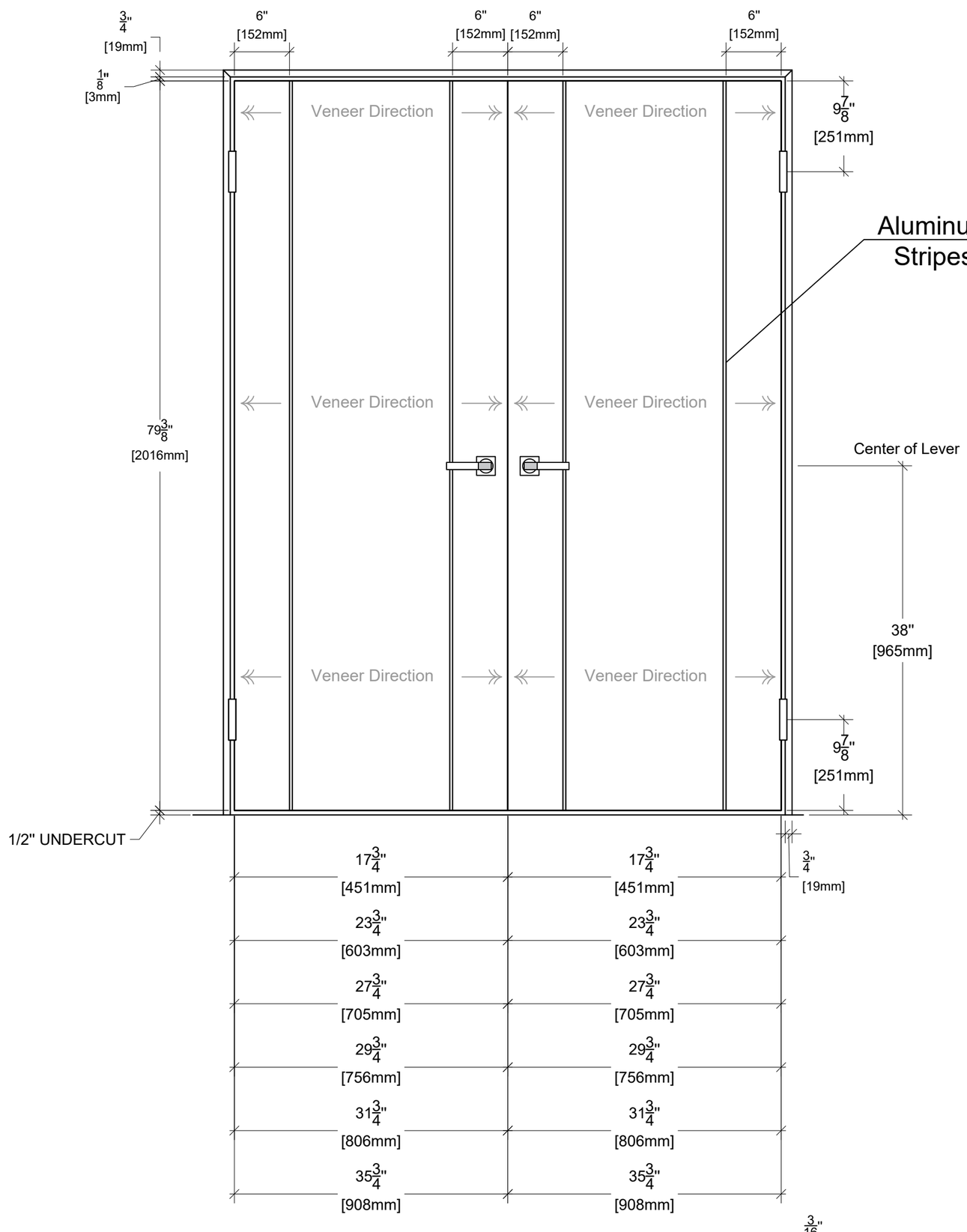

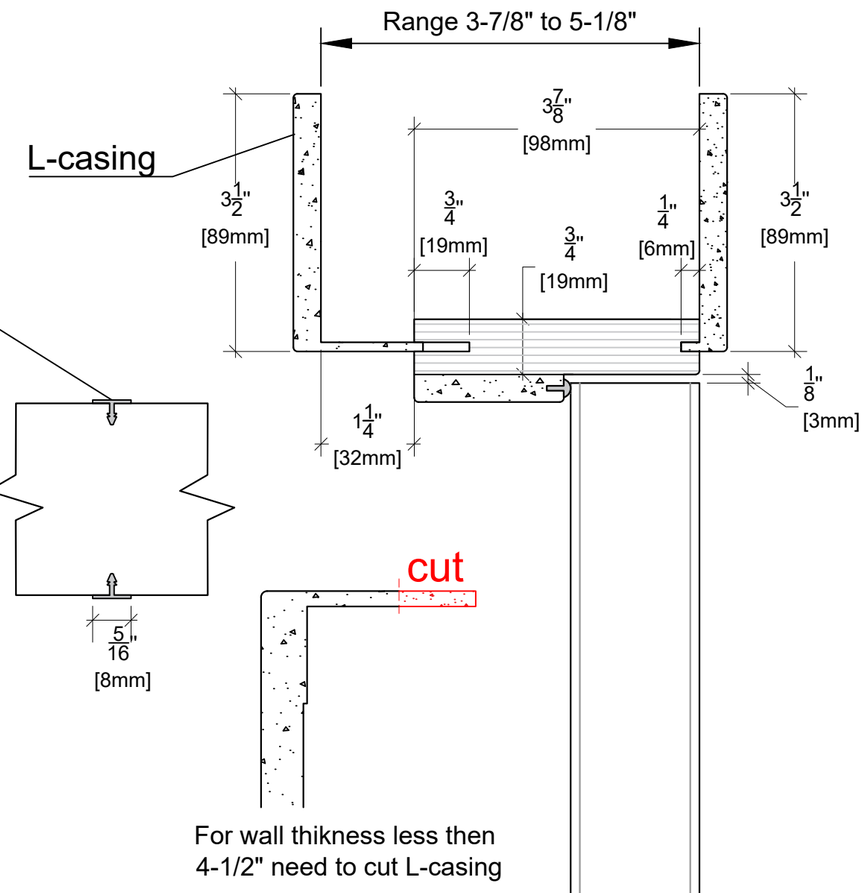

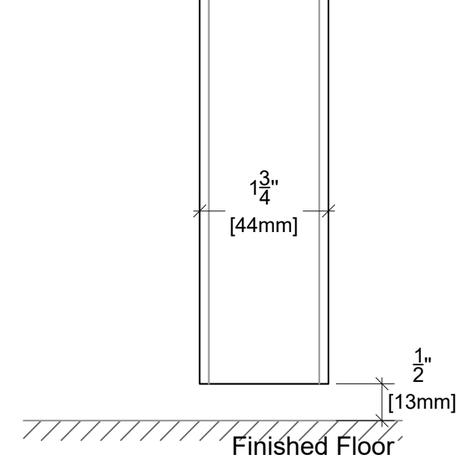

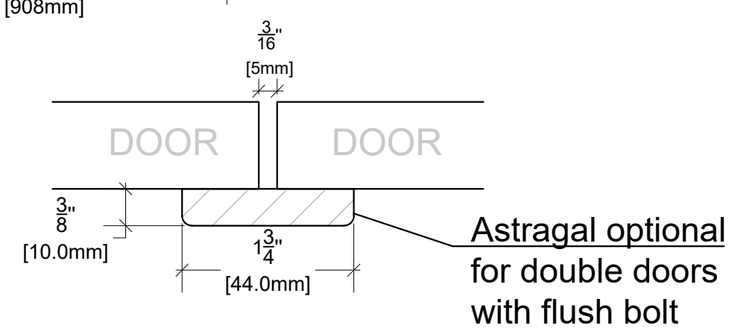

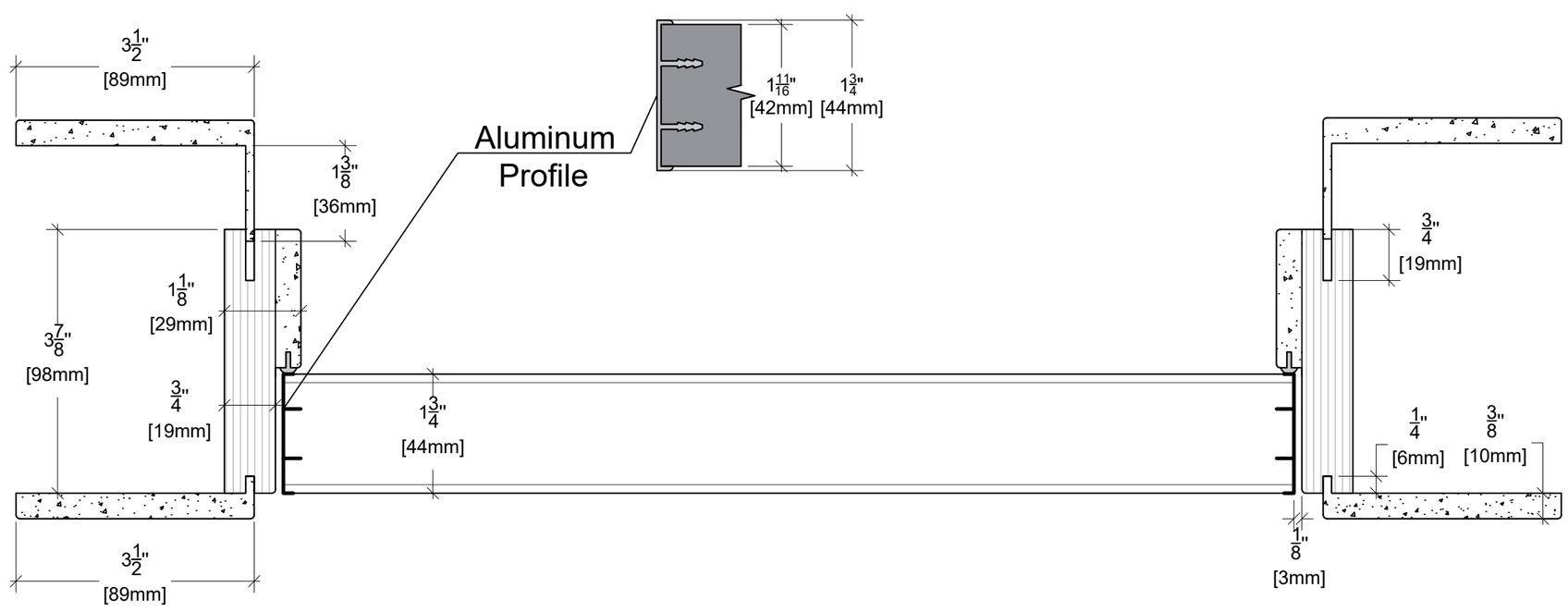

ALMES DOORS

Model: Alluminio - Elivia Horizontal Wood Grain 2VS

Configuration: D Swing 80"