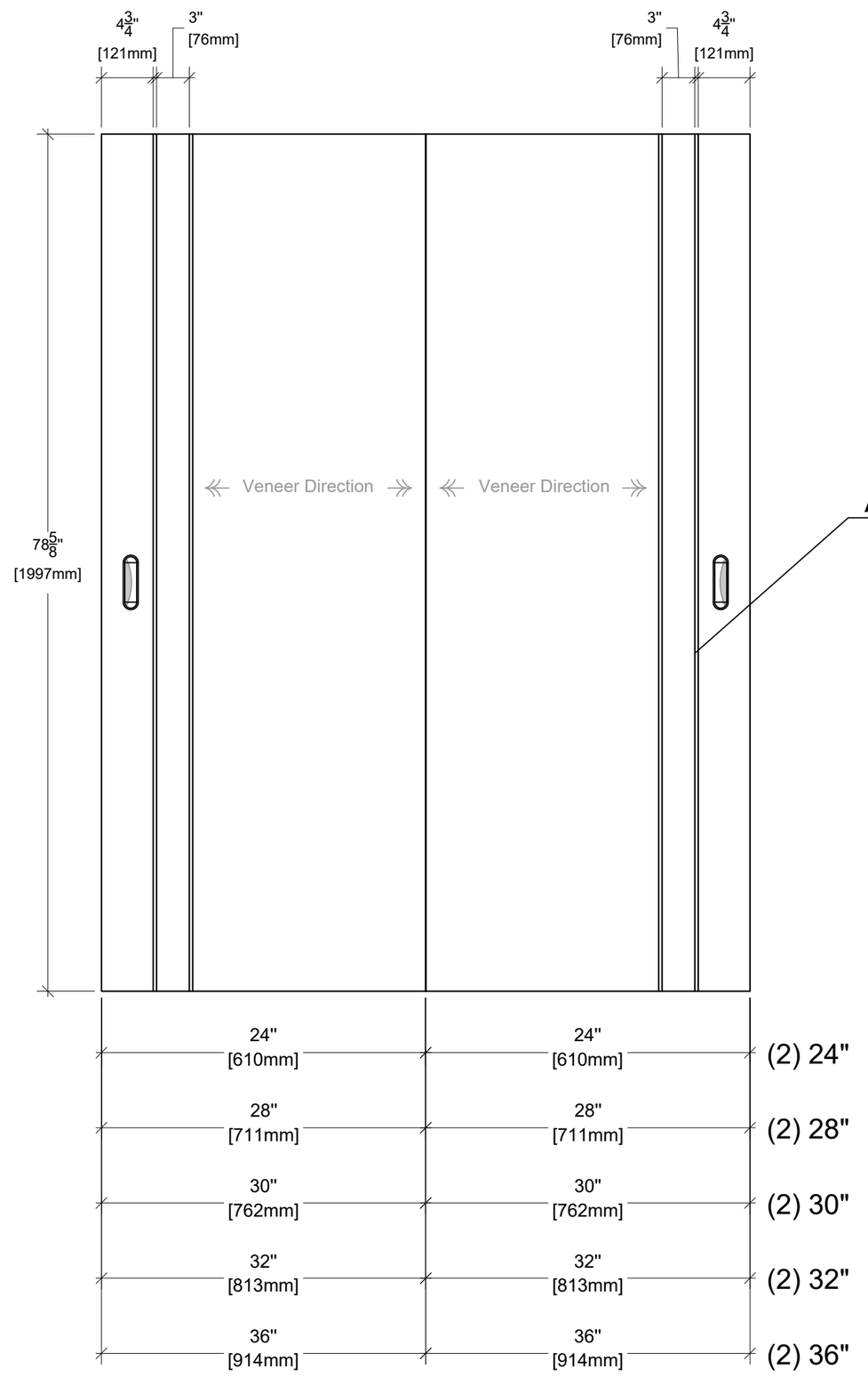

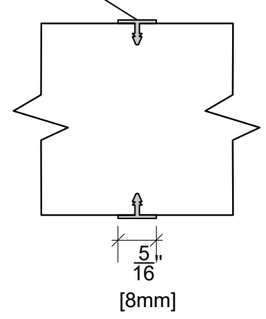

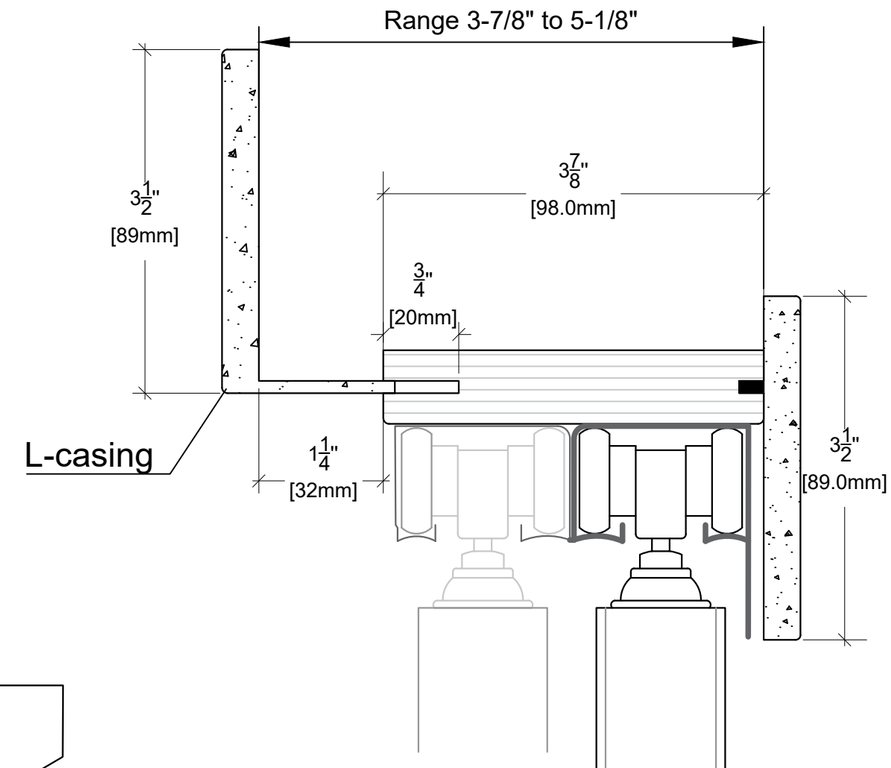

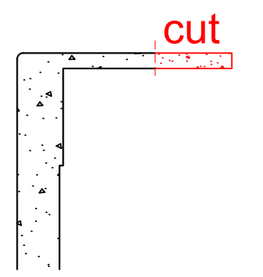

For wall thikness less then
4-1/2" need to cut L-casing

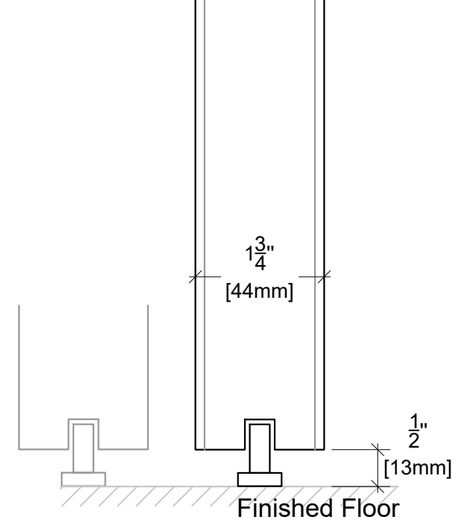

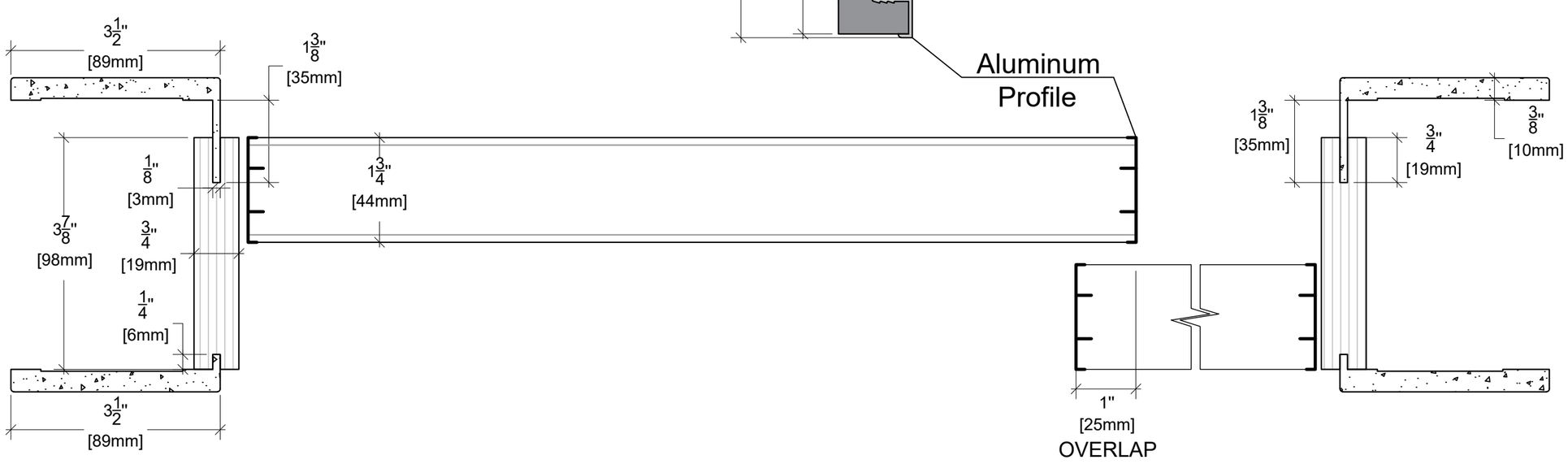

ALMES DOORS

Model: Alluminio - Elivia Horizontal Wood Grain 2VS2

Configuration: Bypass 80"