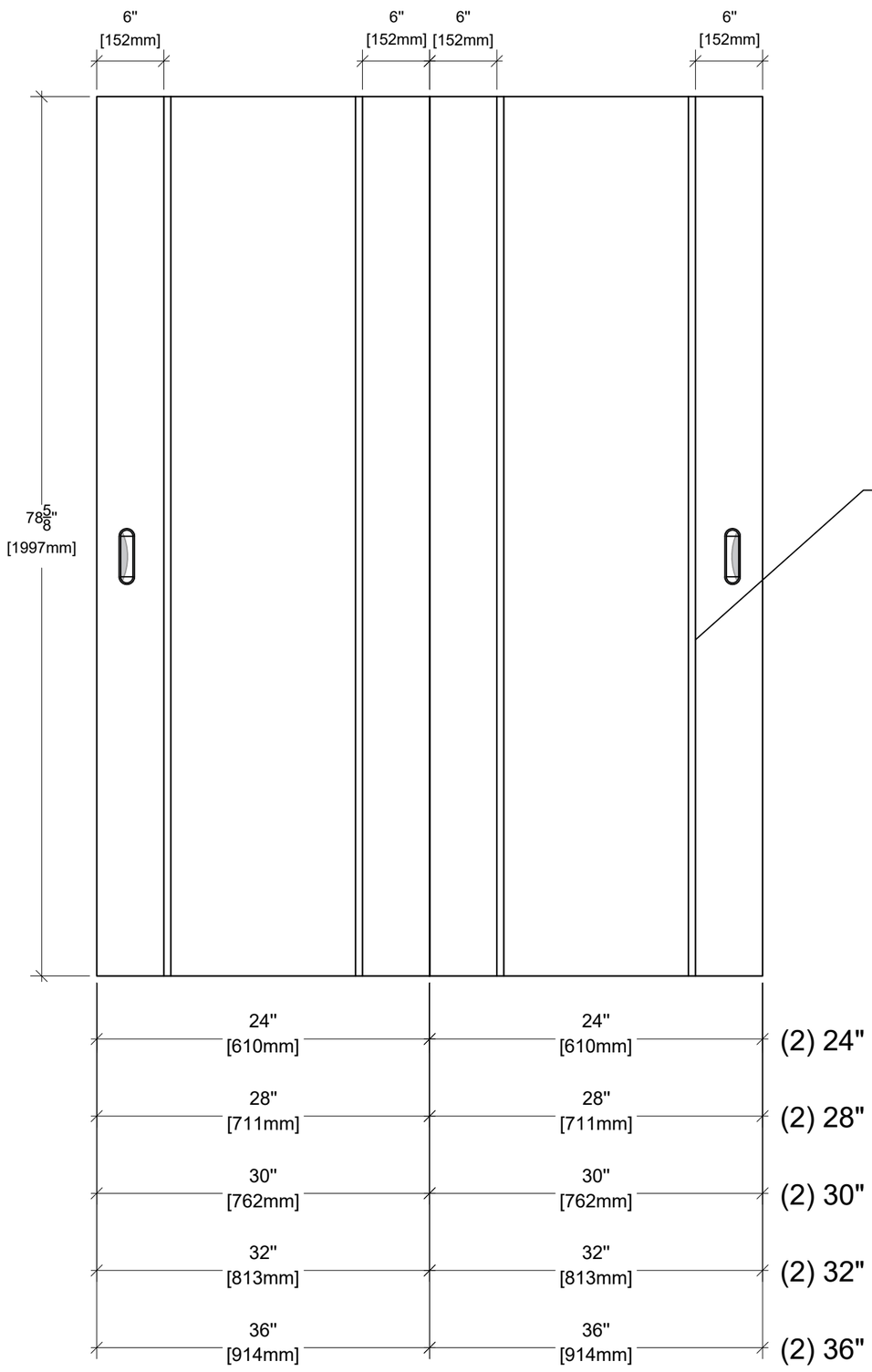

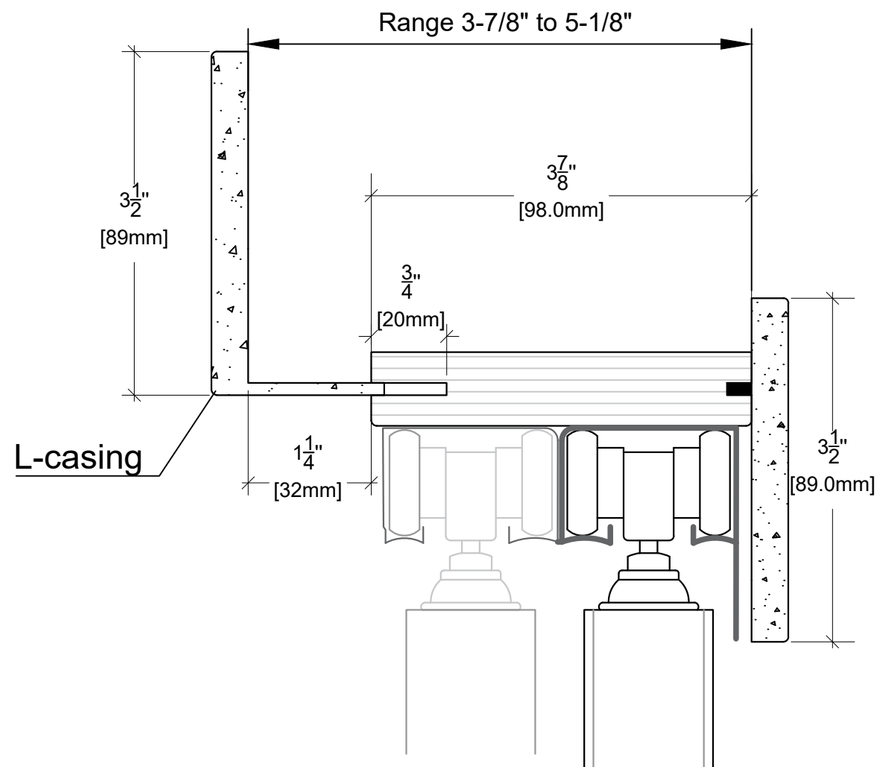

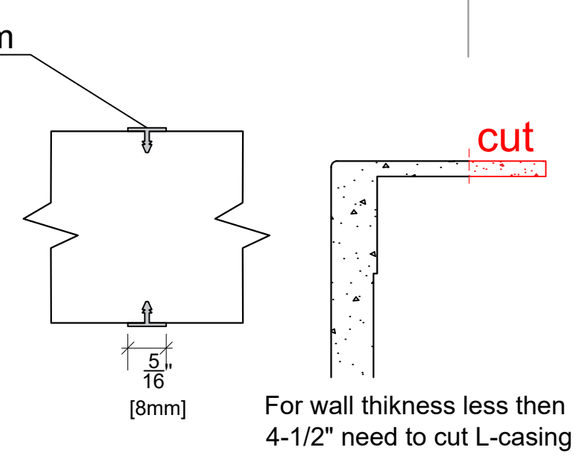

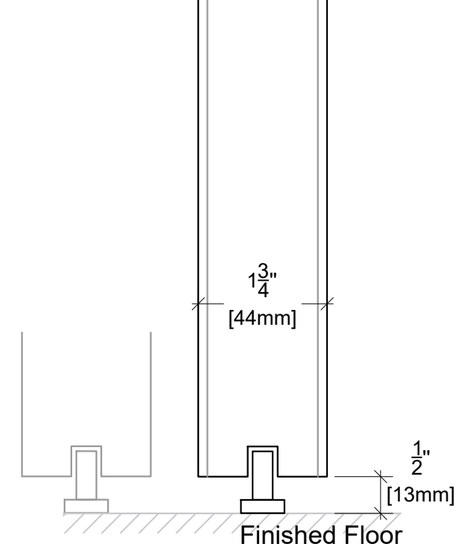

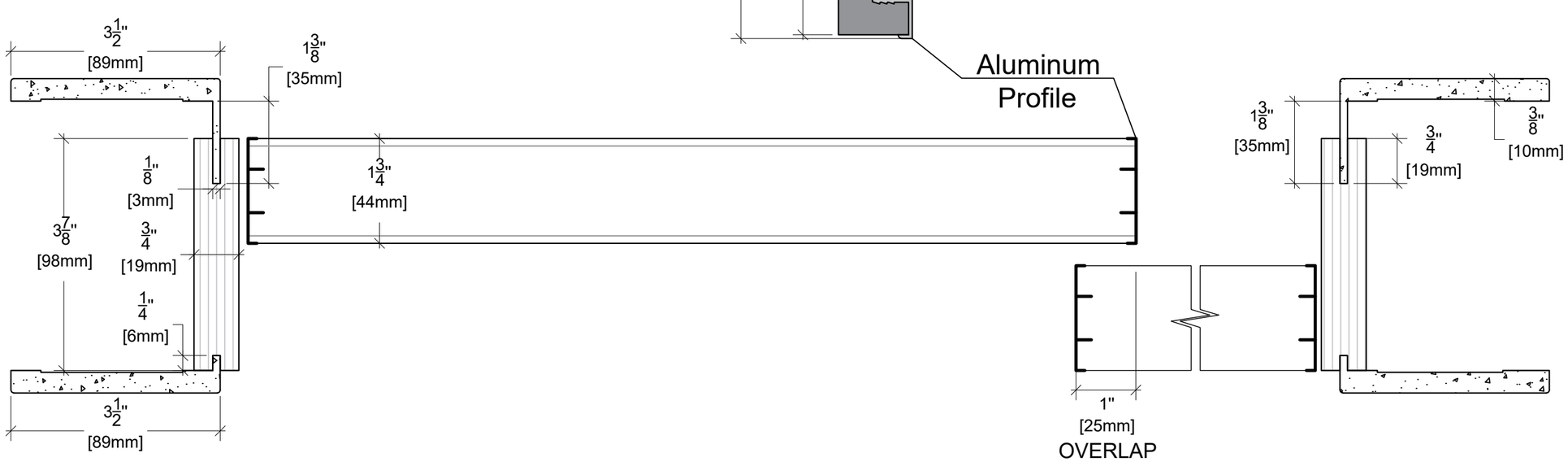

ALMES DOORS

Model: Alluminio - Elivia Paint 2VS

Configuration: Bypass 80"