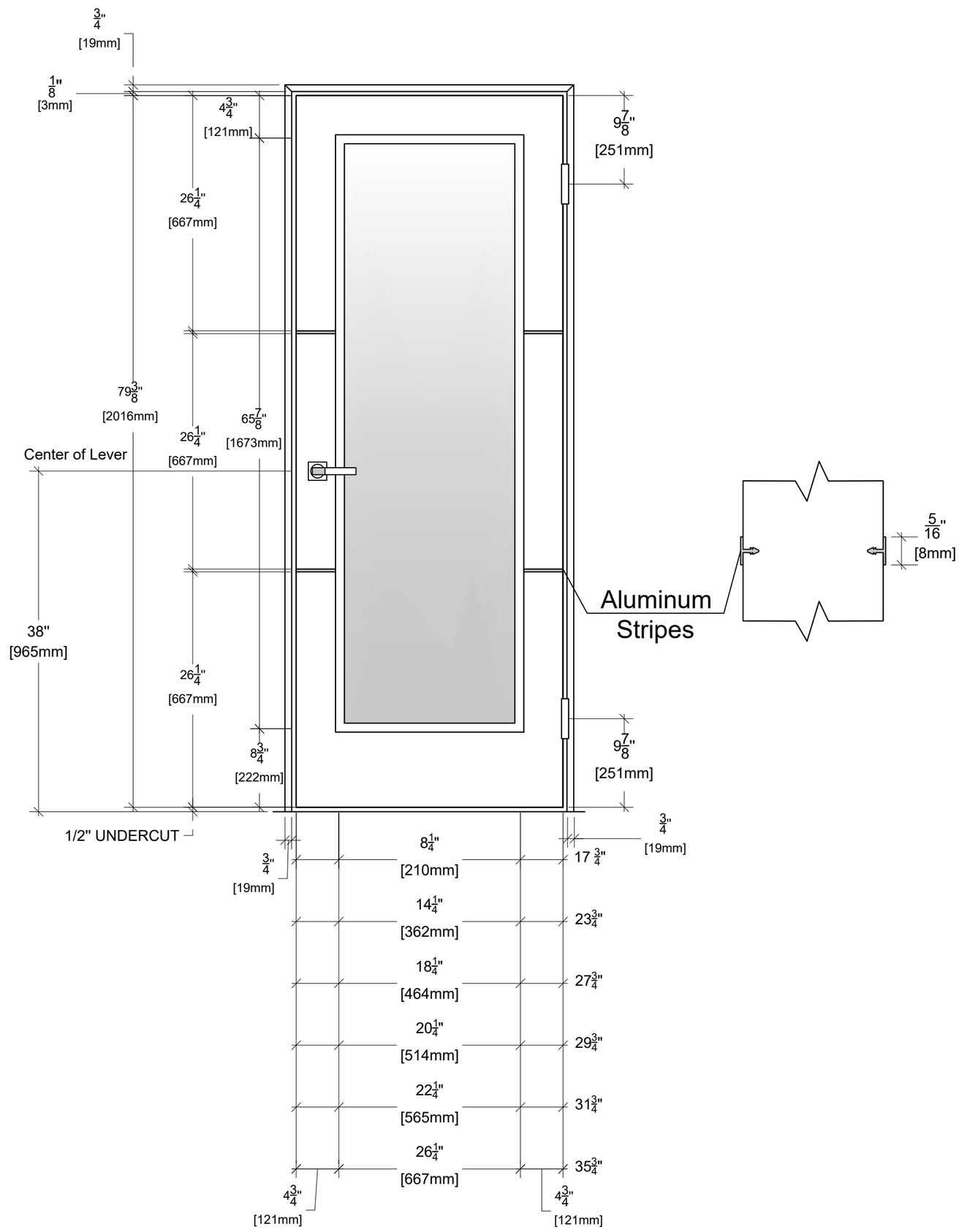

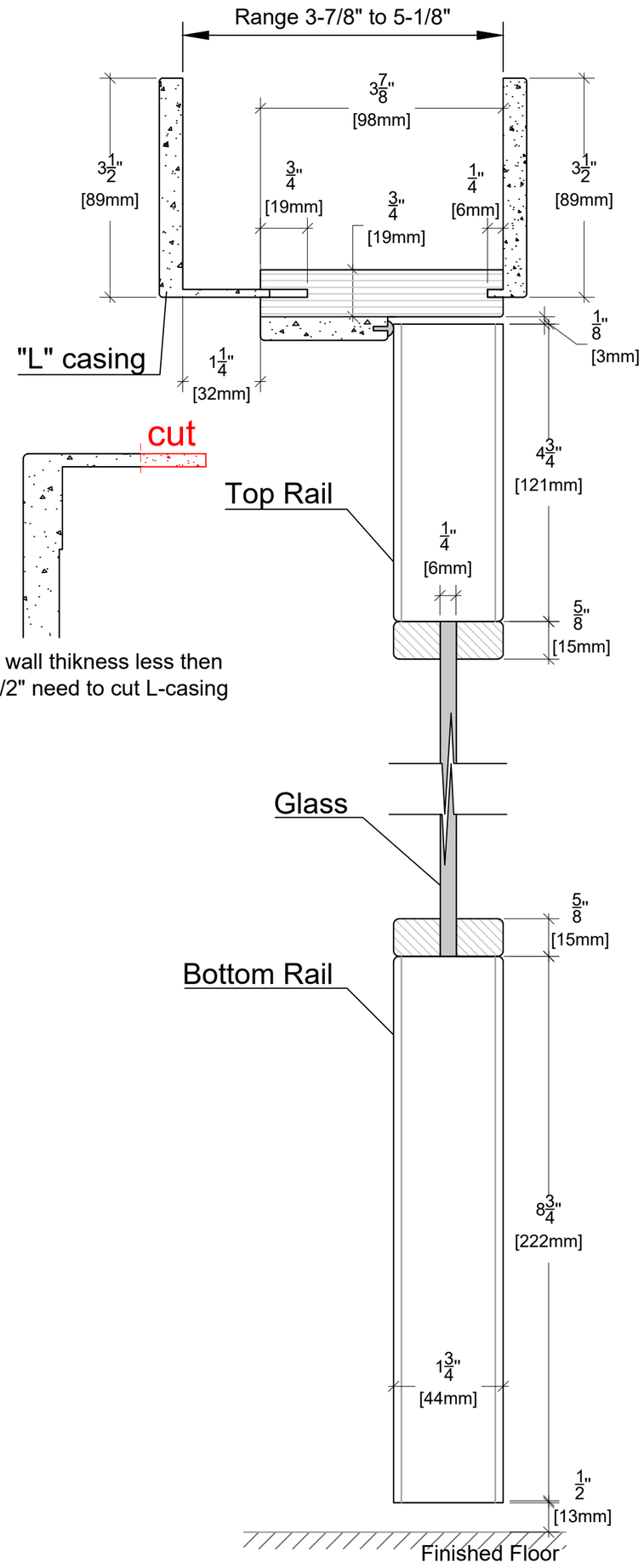

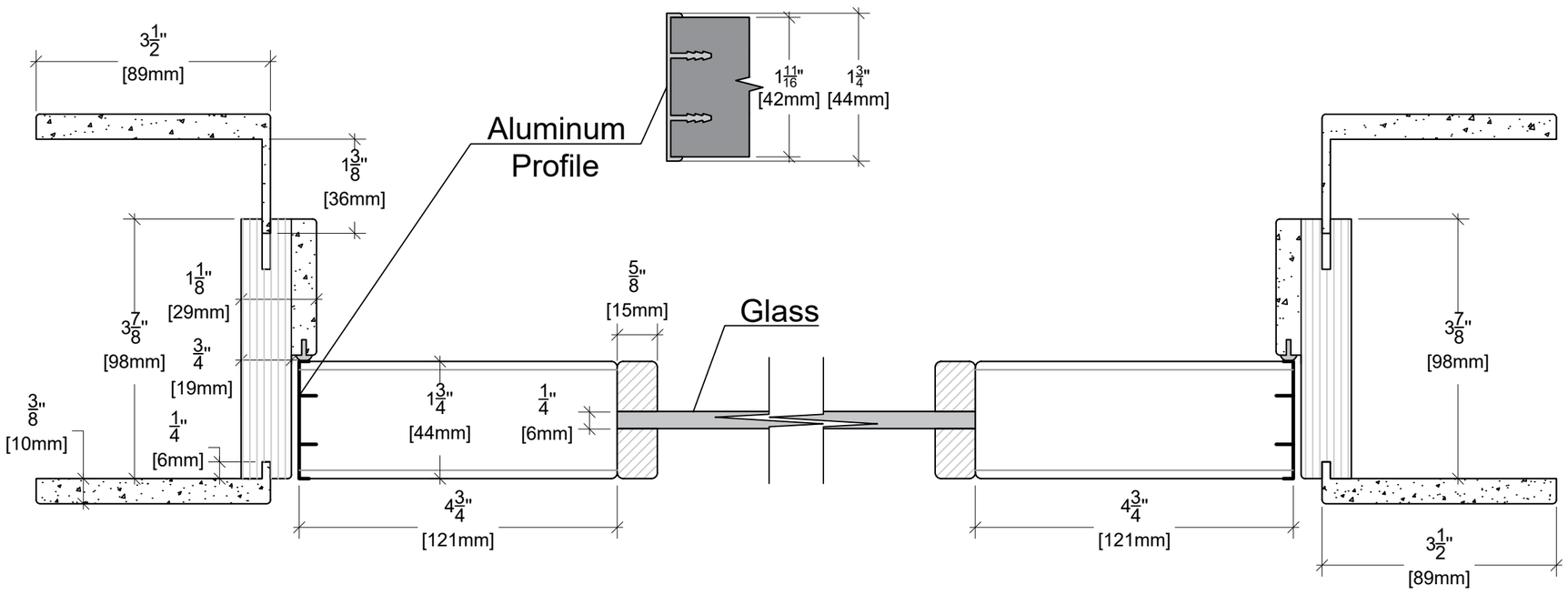

ALMES DOORS

Model: Alluminio - Elivia Paint La Luce 2HS

Configuration: Swing 80"