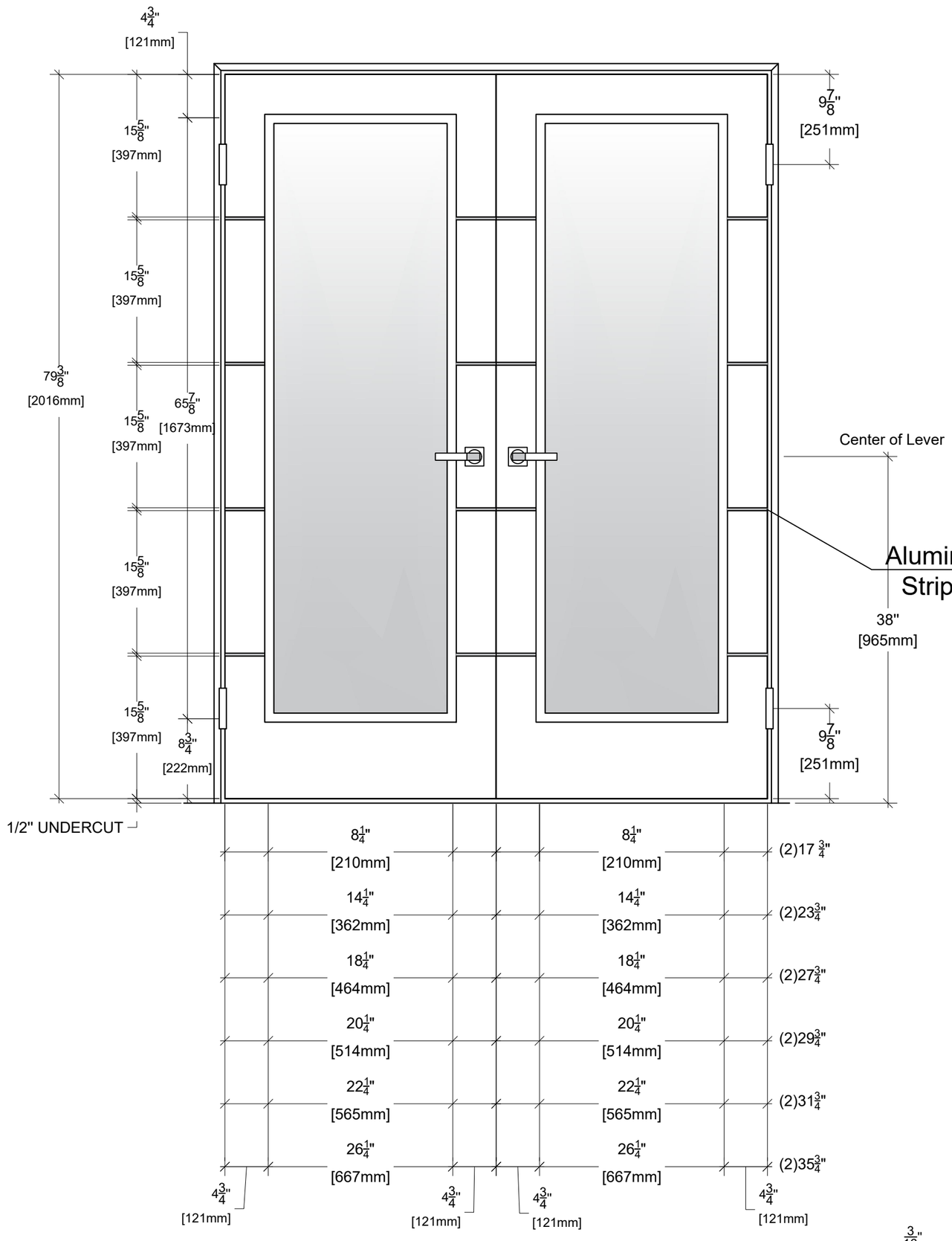

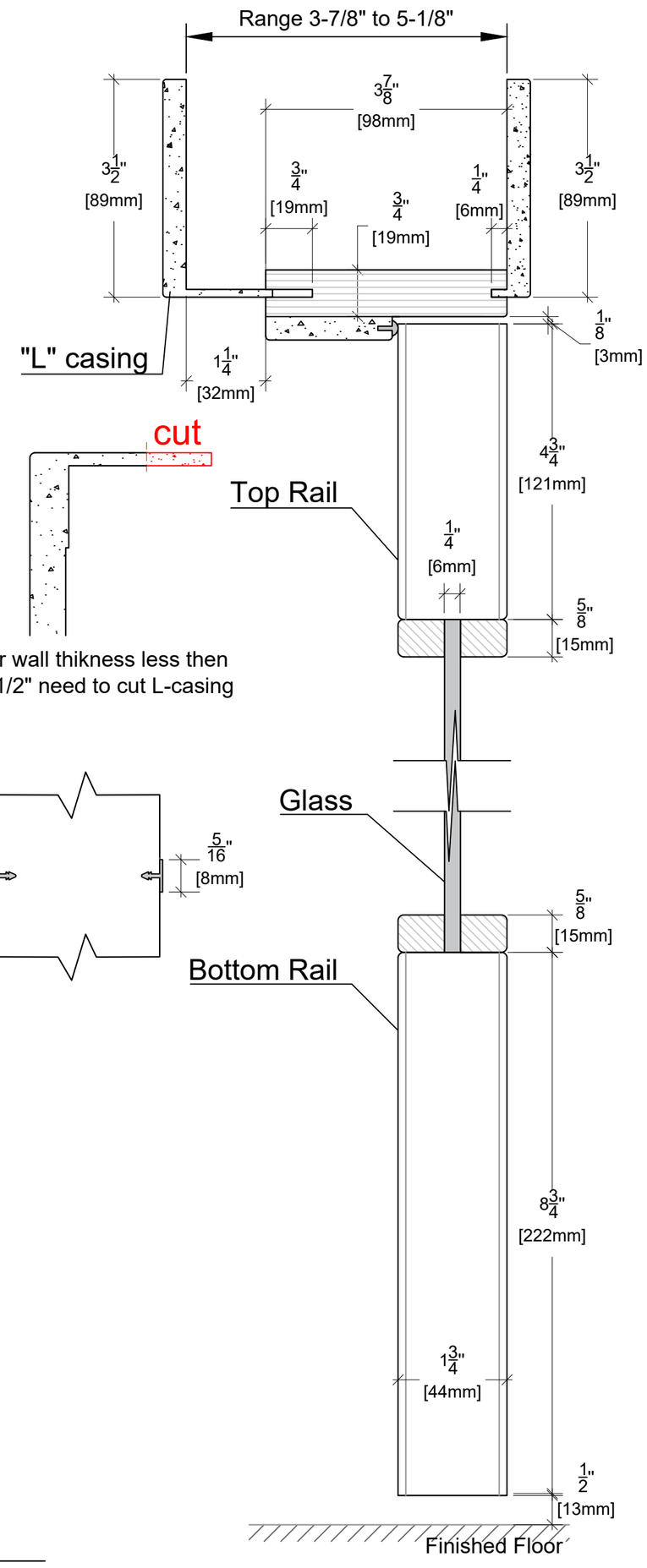

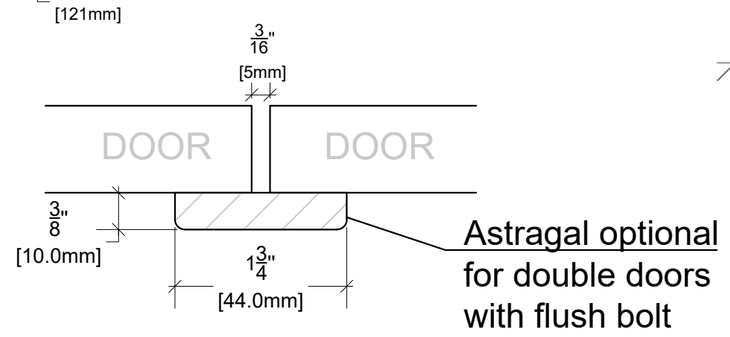

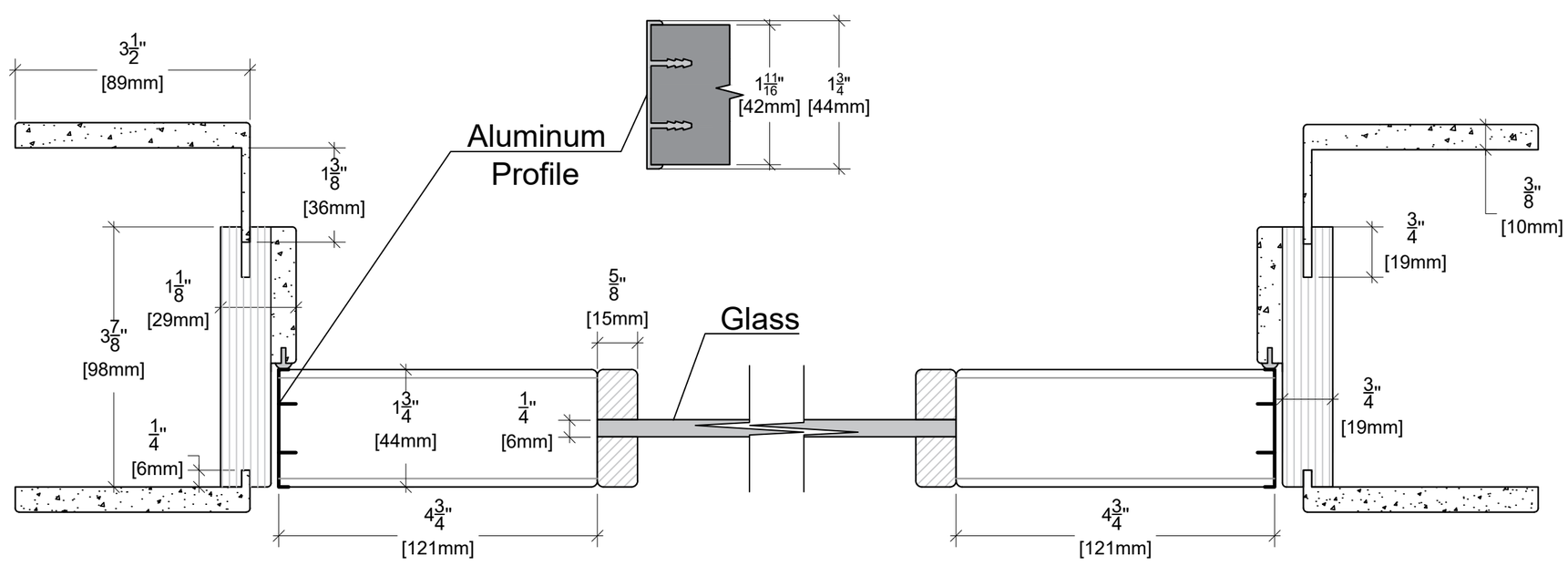

ALMES DOORS

Model: Alluminio - Elivia Paint La Luce 4HS

Configuration: D Swing 80"