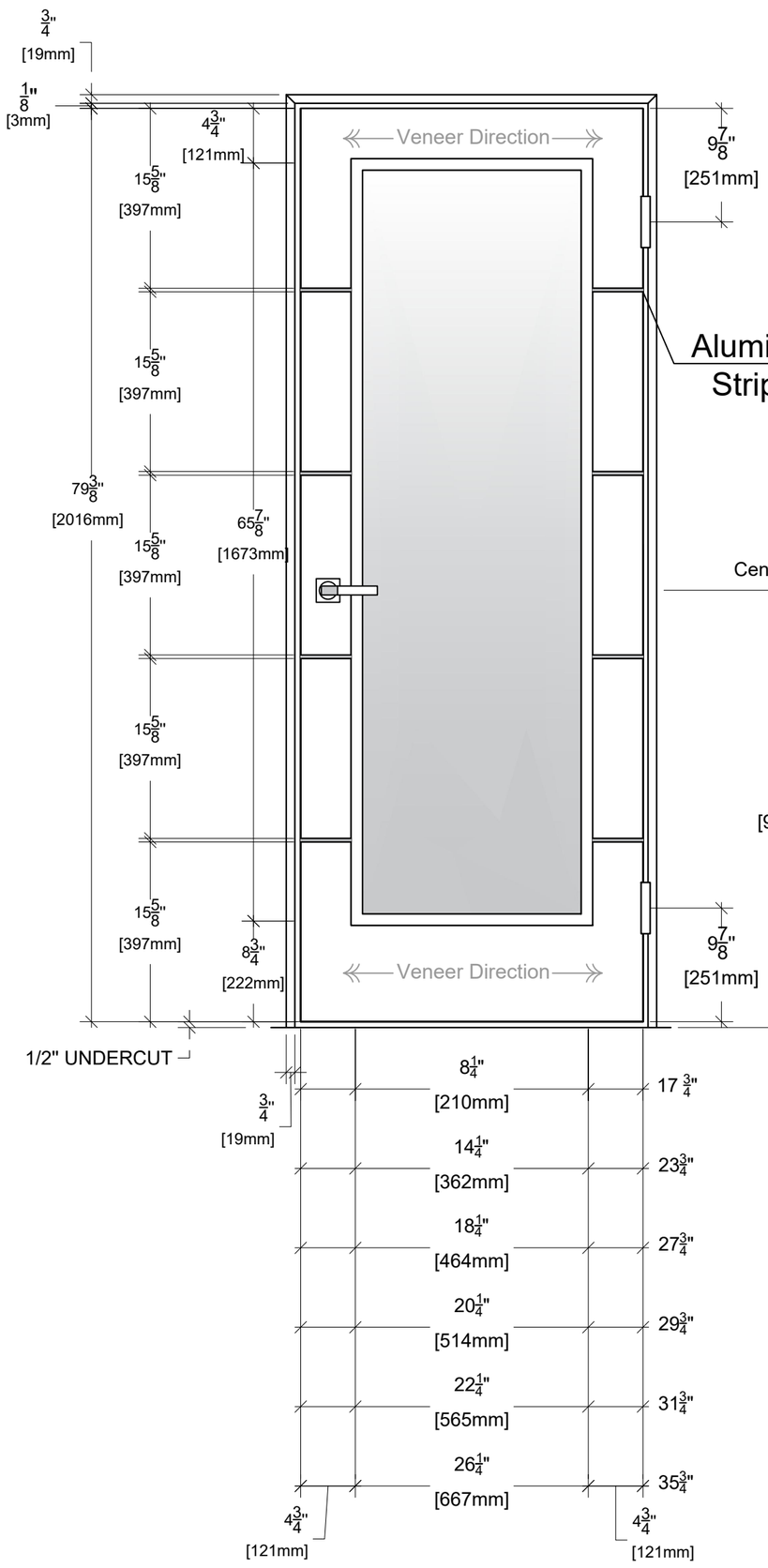

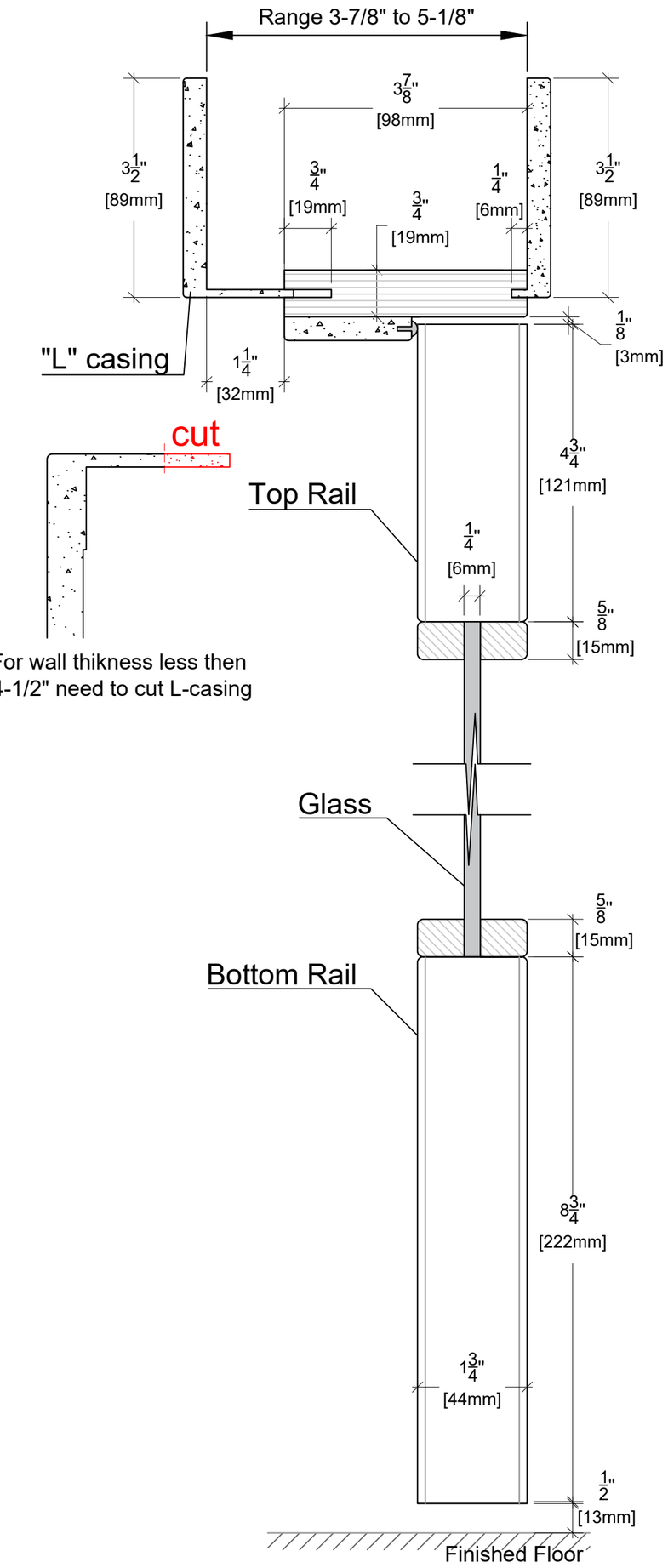

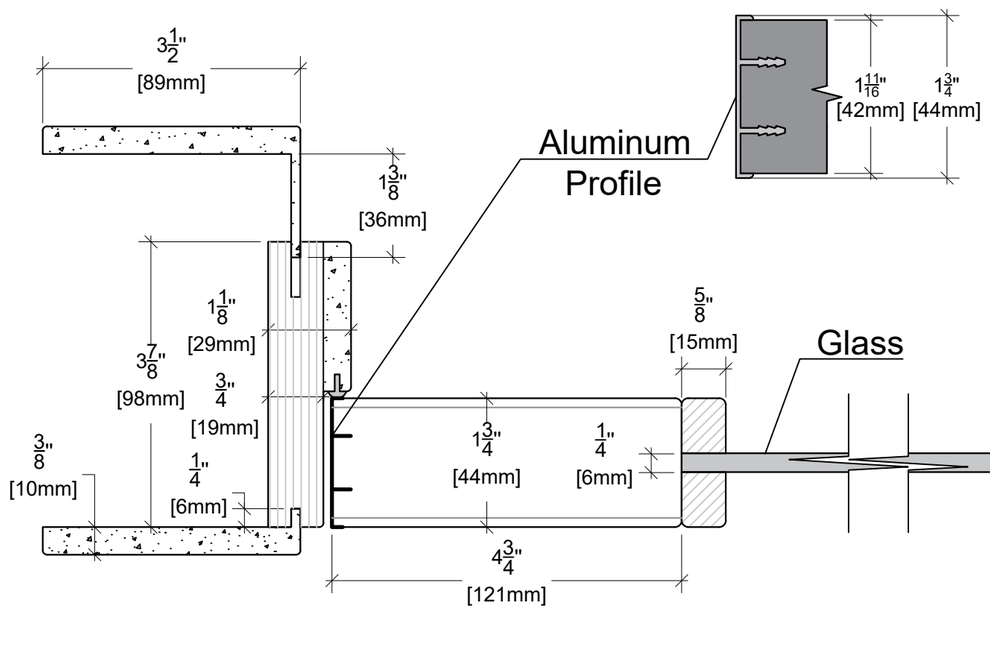

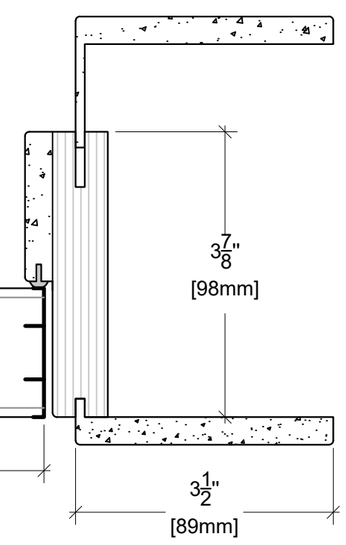

ALMES DOORS

Model: Alluminio - Elivia Horizontal Wood Grain La Luce 4HS

Configuration: Swing 80"