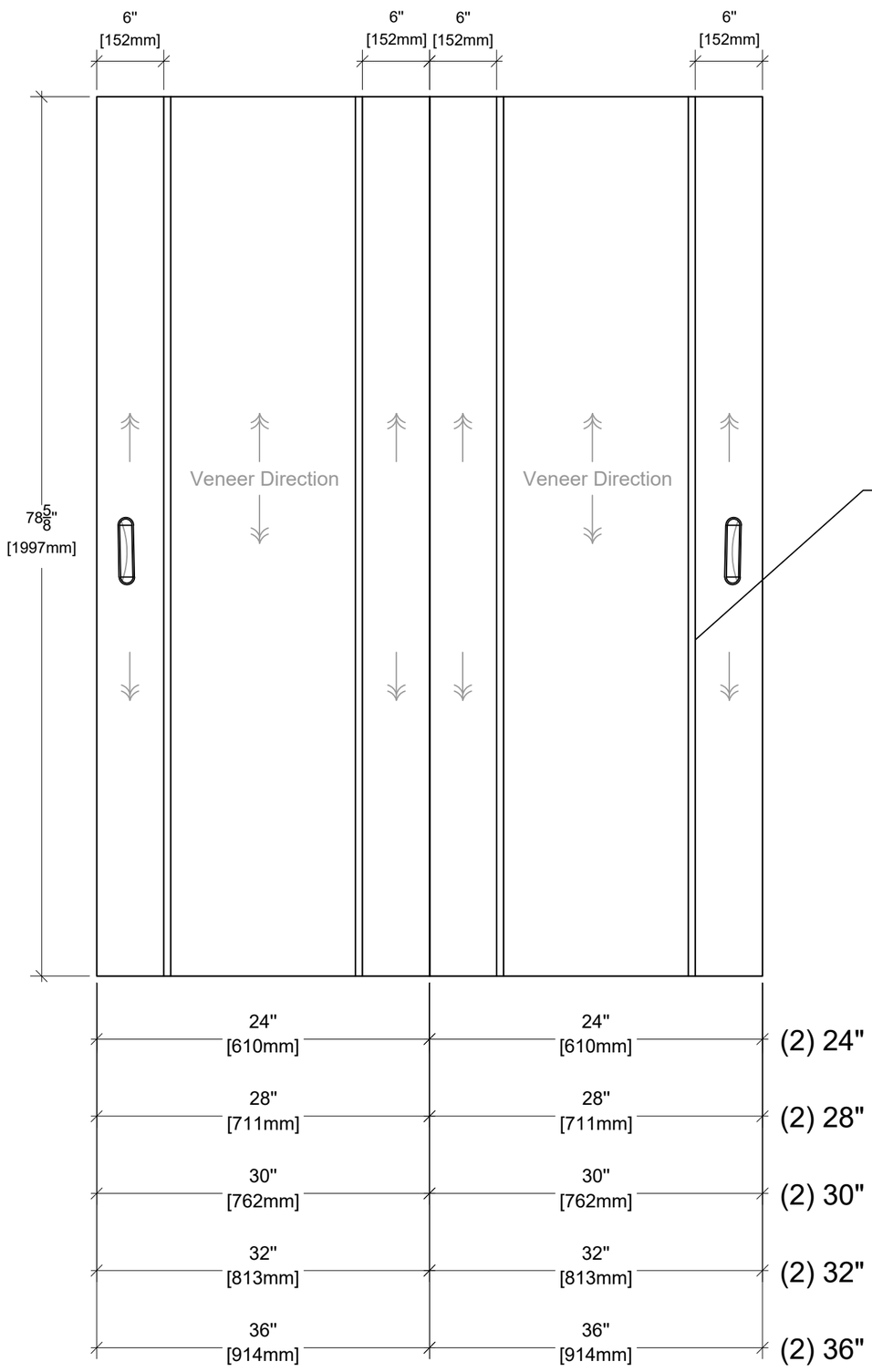

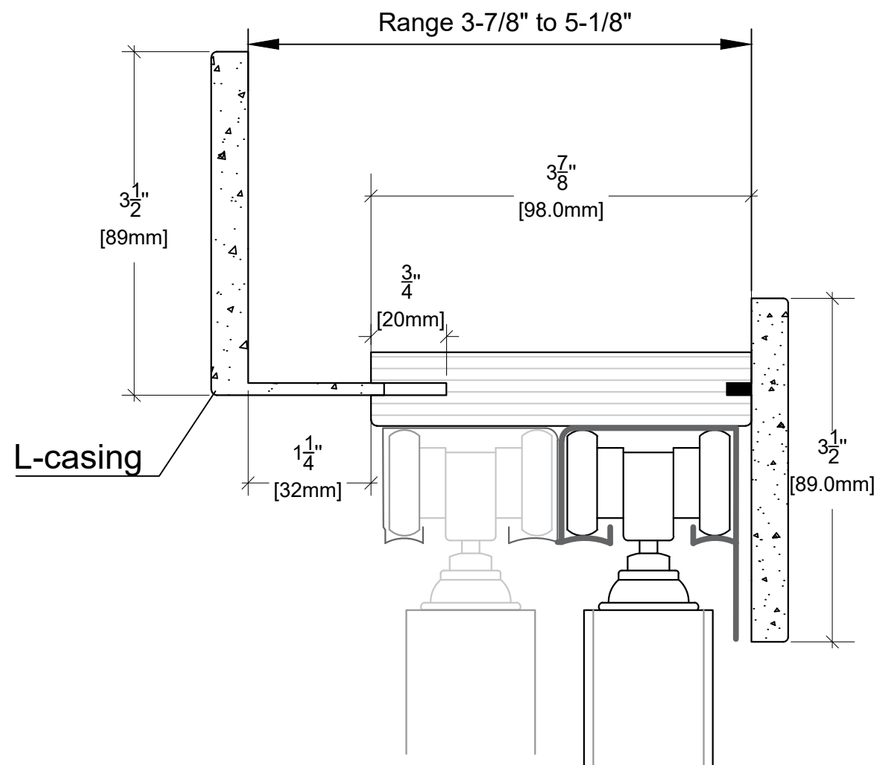

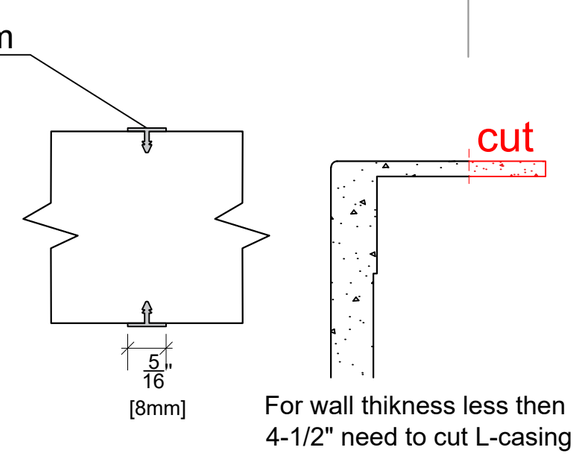

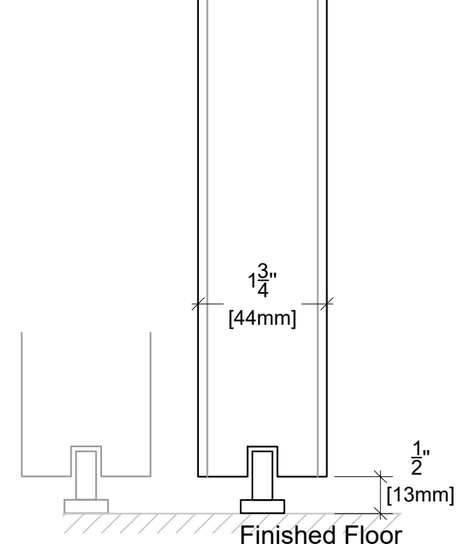

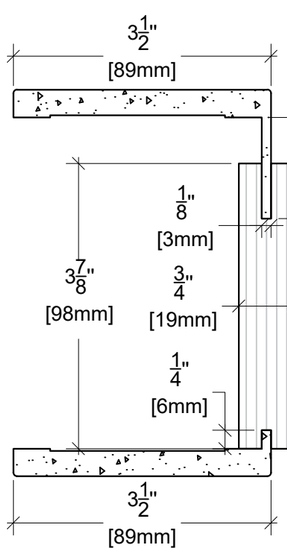

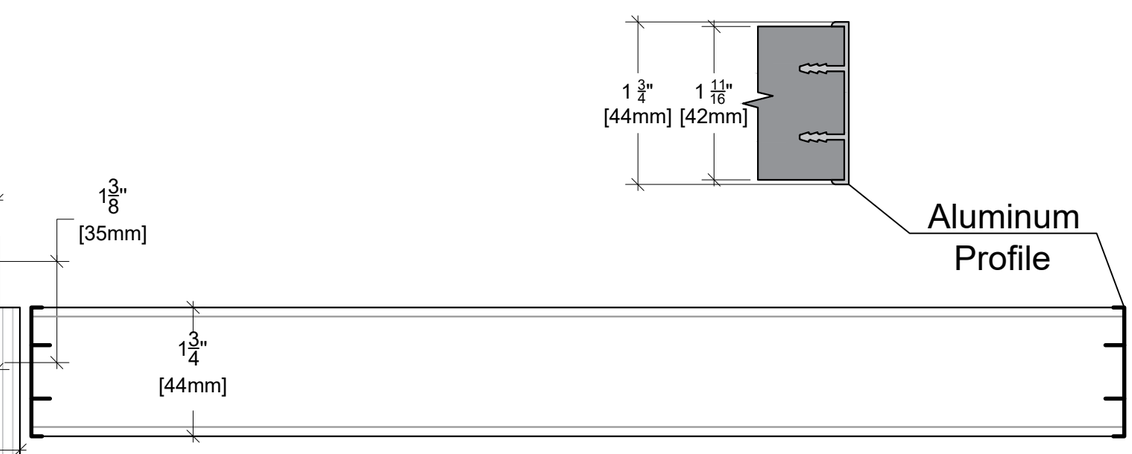

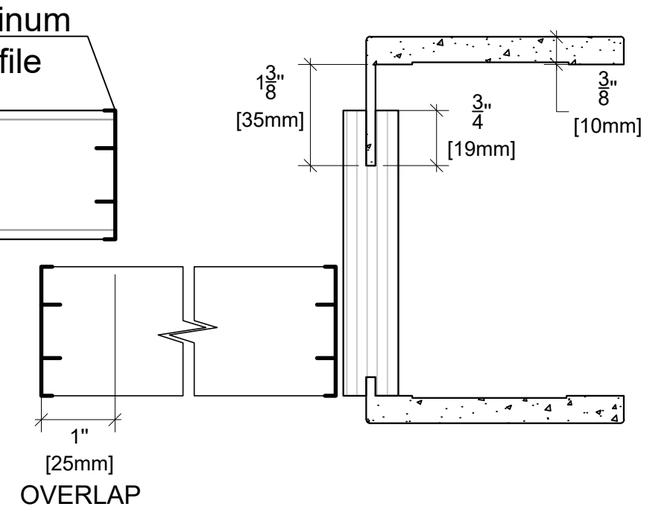

ALMES DOORS

Model: Alluminio - Elivia Vertical Wood Grain 2VS

Configuration: Bypass 80"