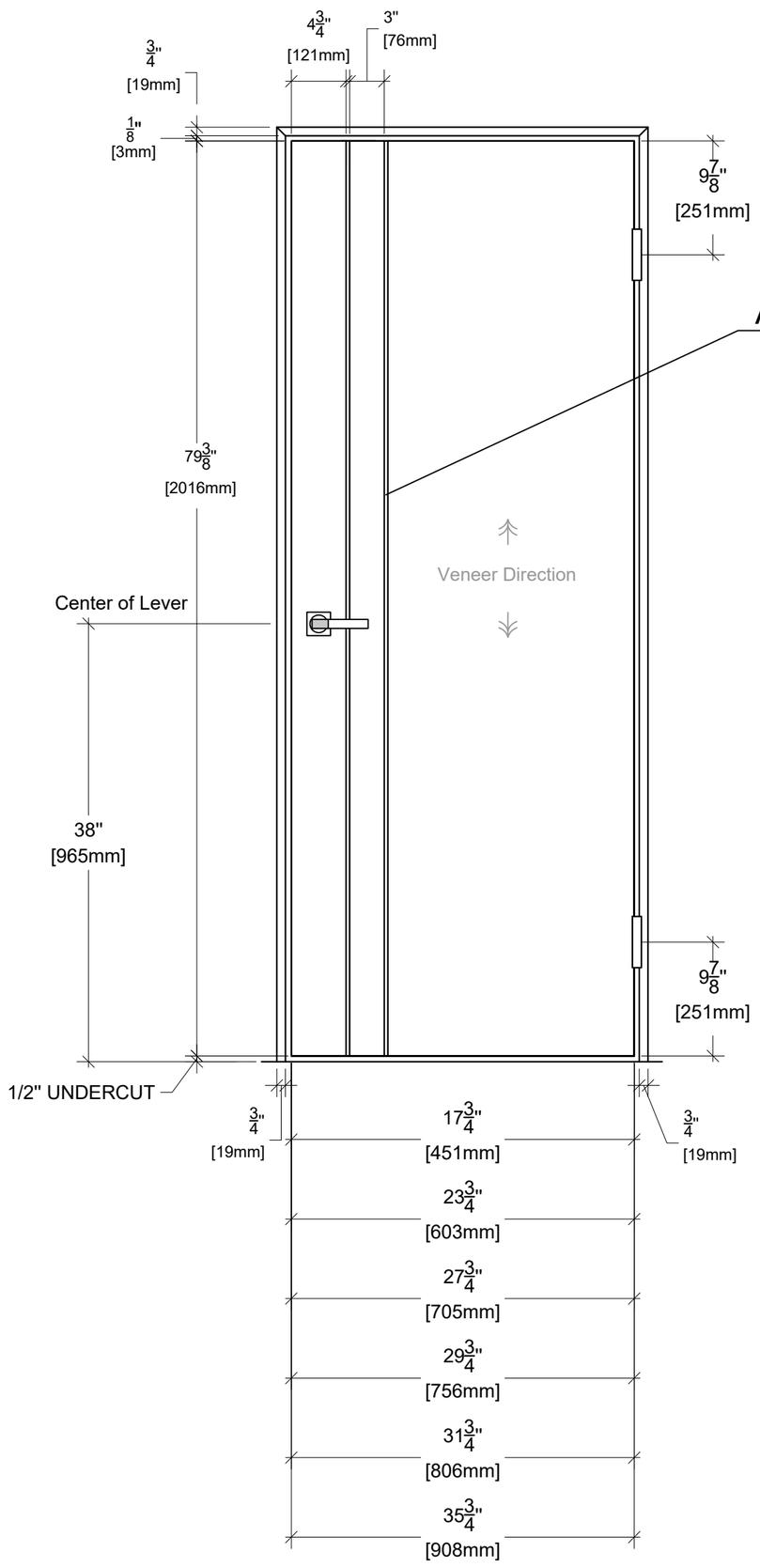

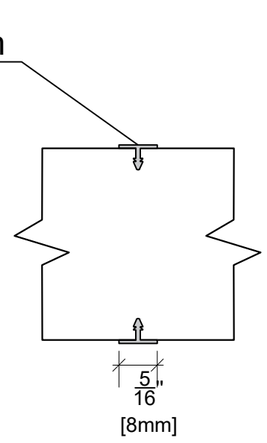

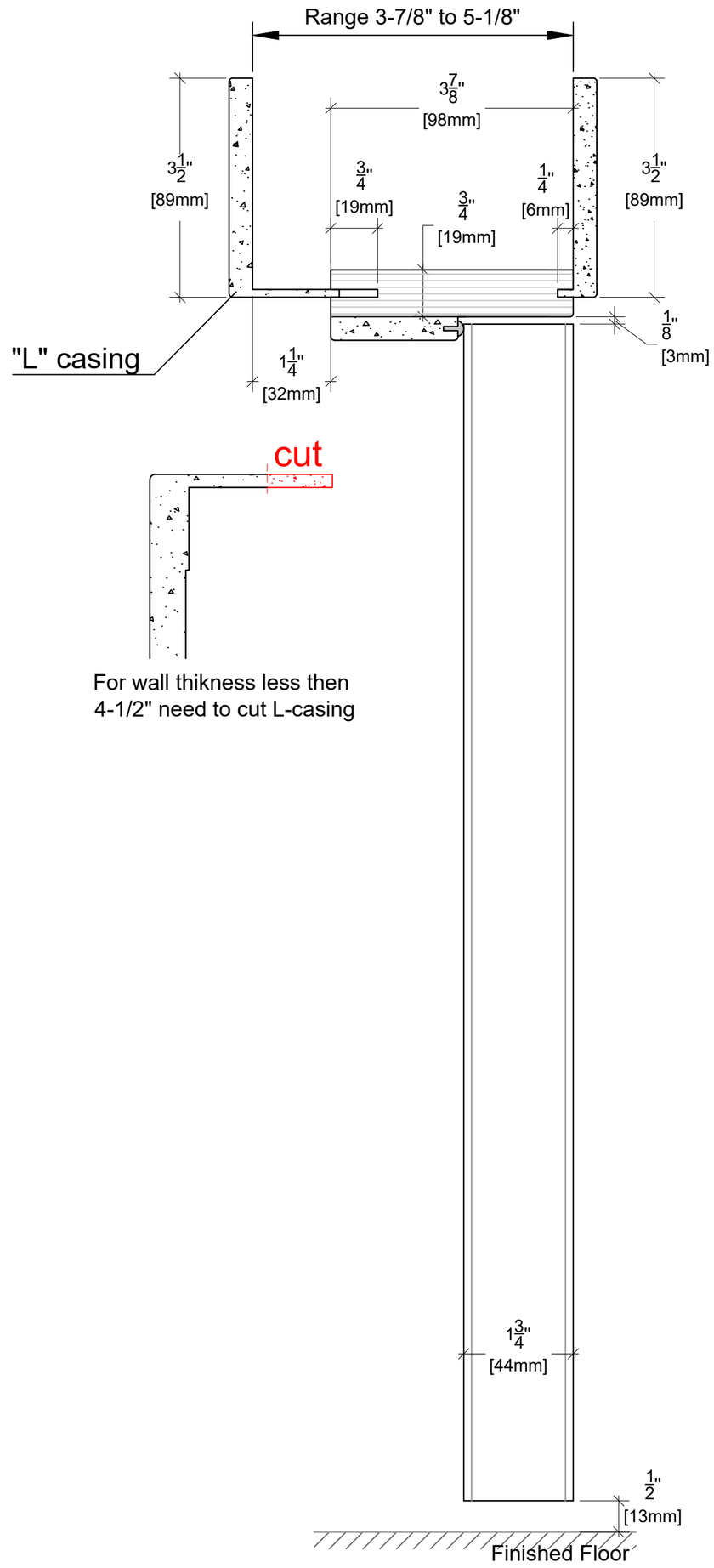

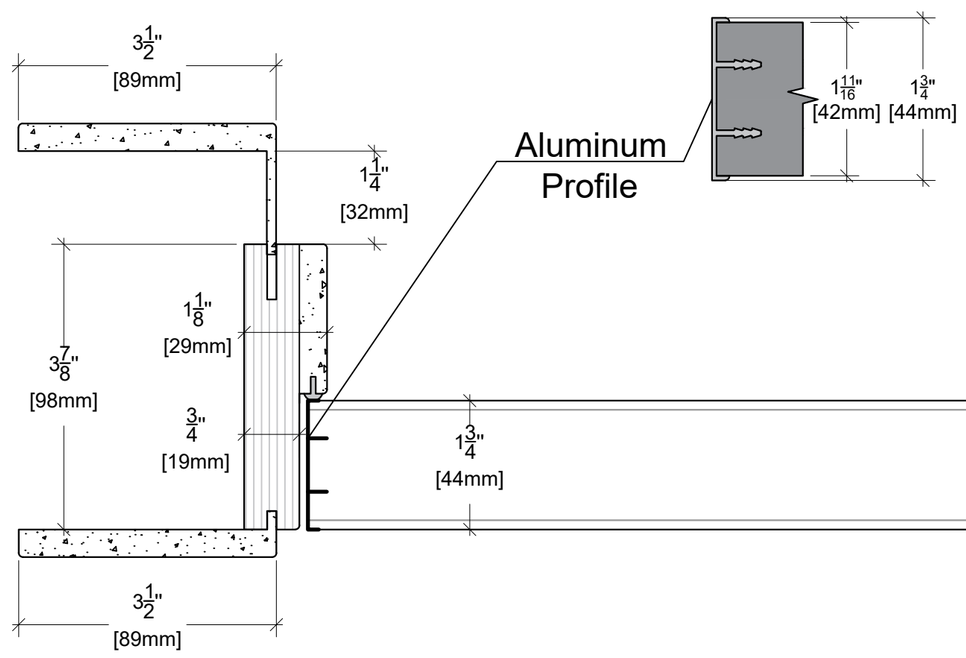

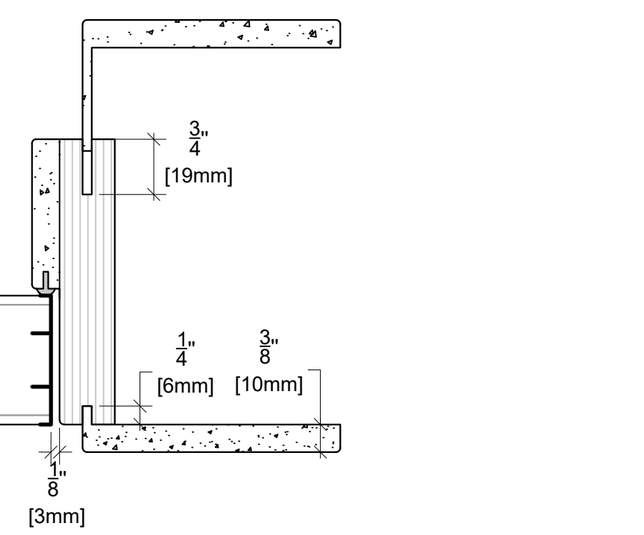

ALMES DOORS

Model: Alluminio - Elivia Vertical Wood Grain 2VS2

Configuration: Swing 80"