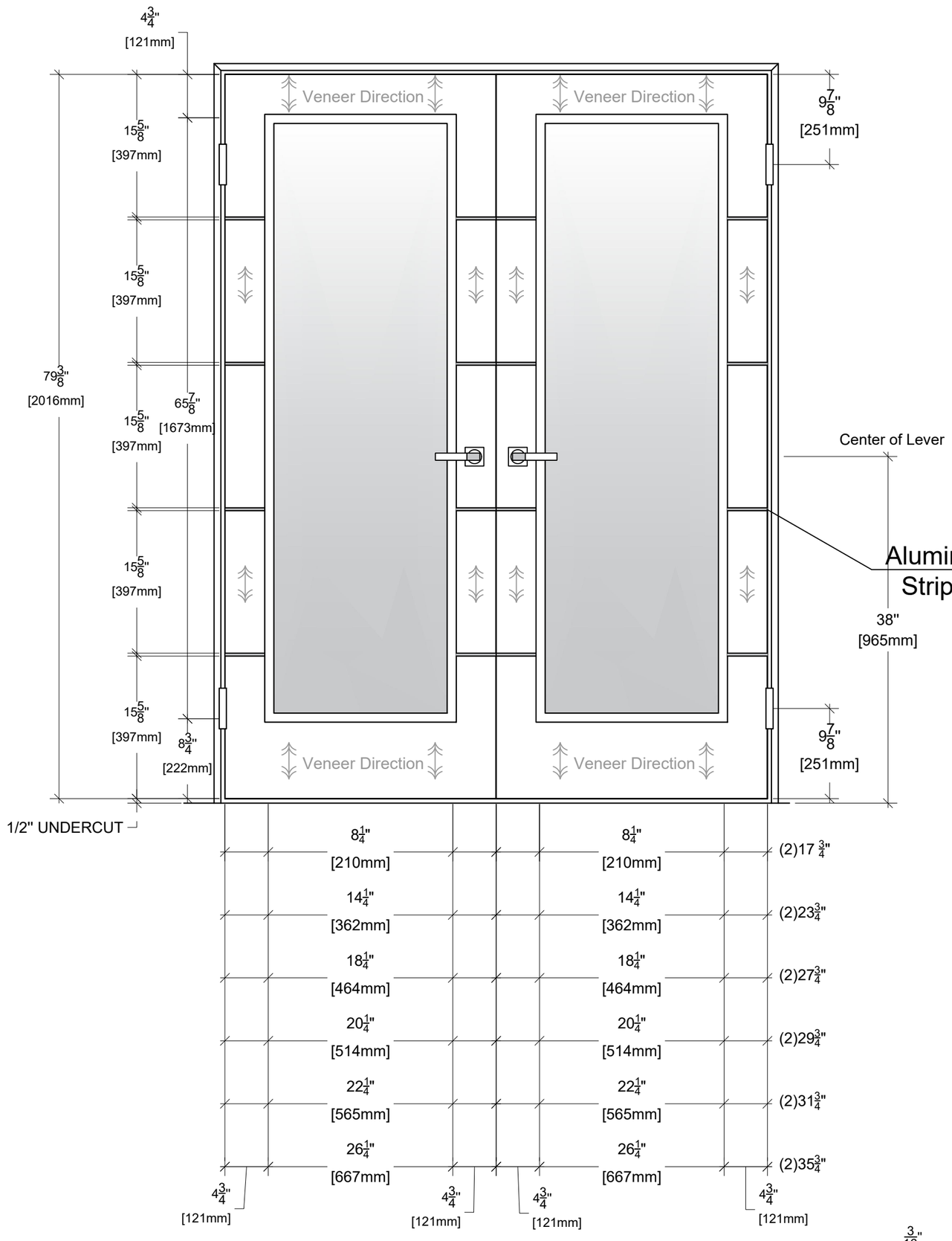


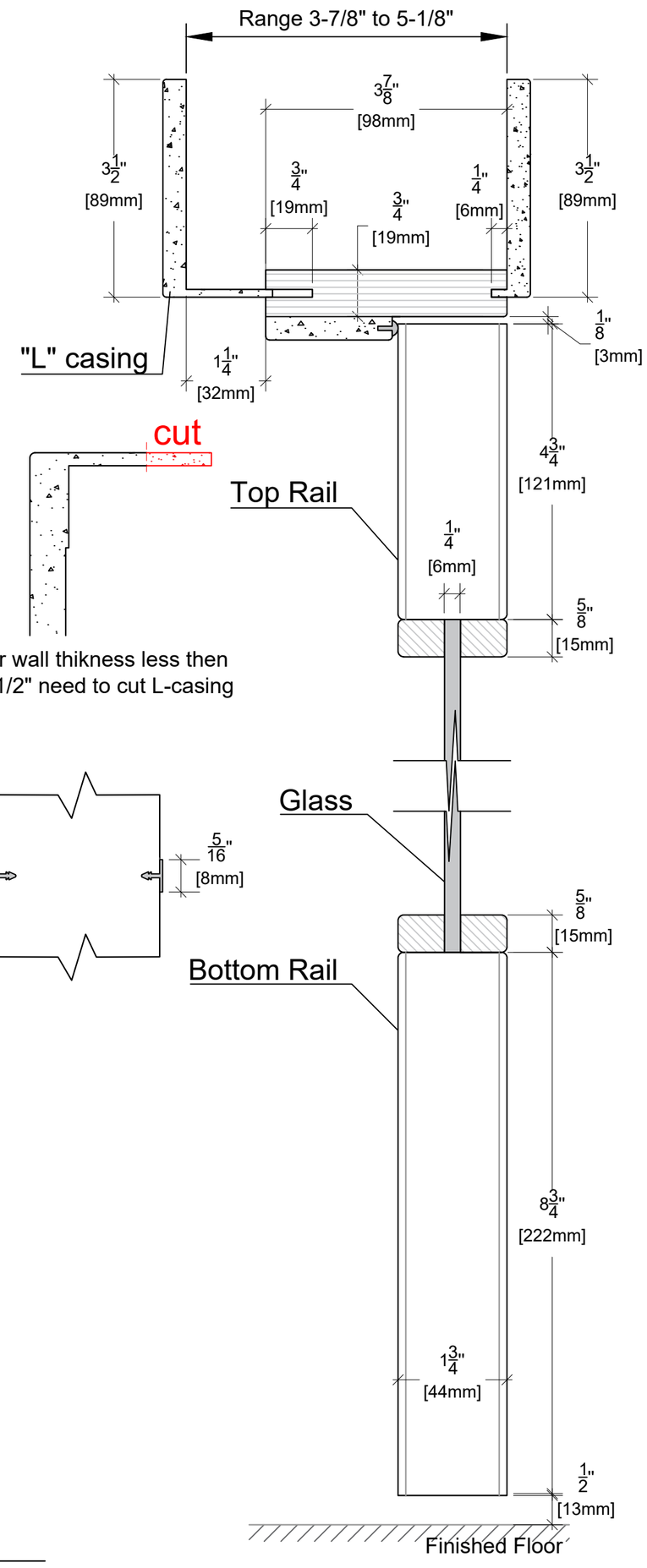


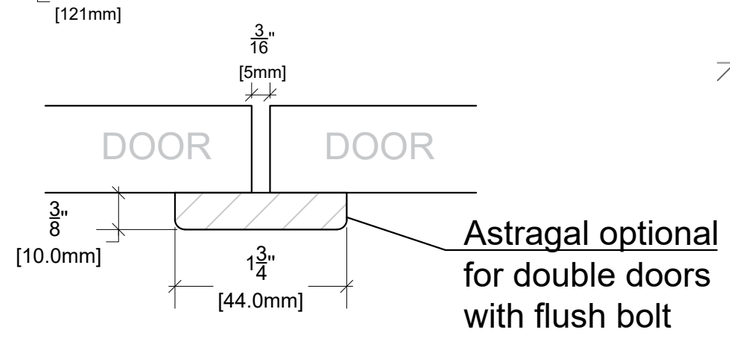


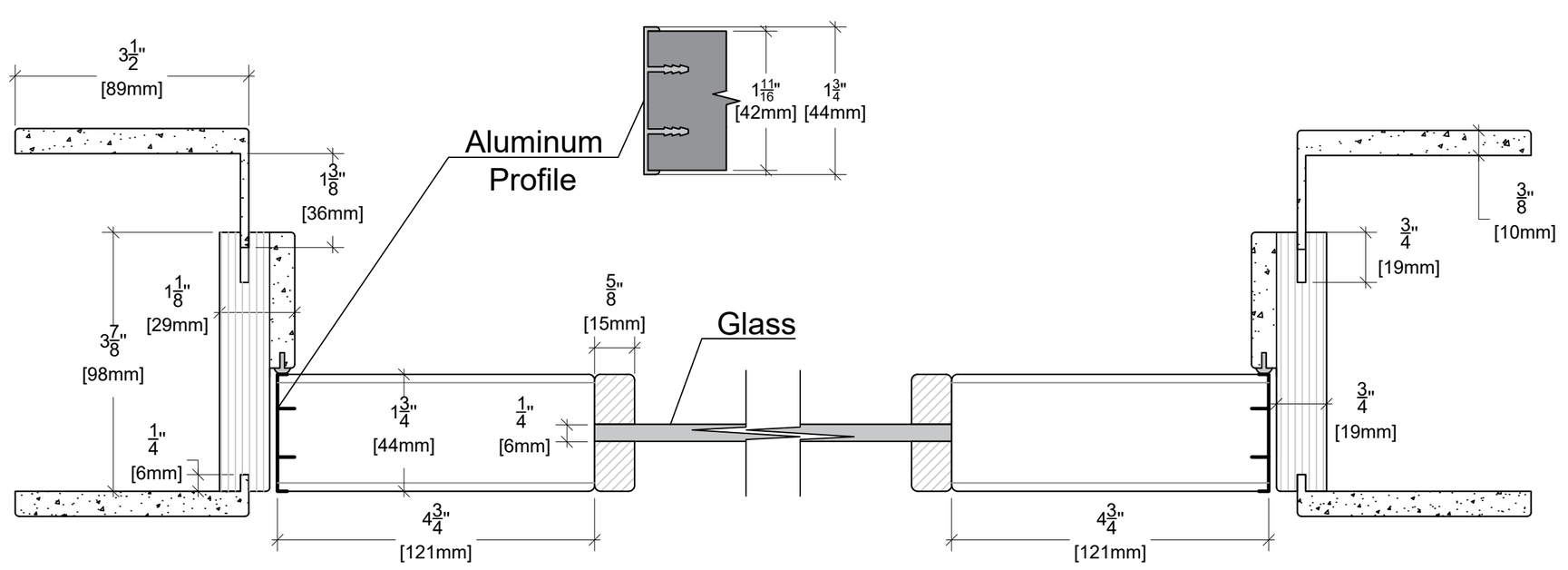


ALMES DOORS

Model: Alluminio - Elivia Vertical Wood Grain La Luce 4HS

Configuration: D Swing 80"