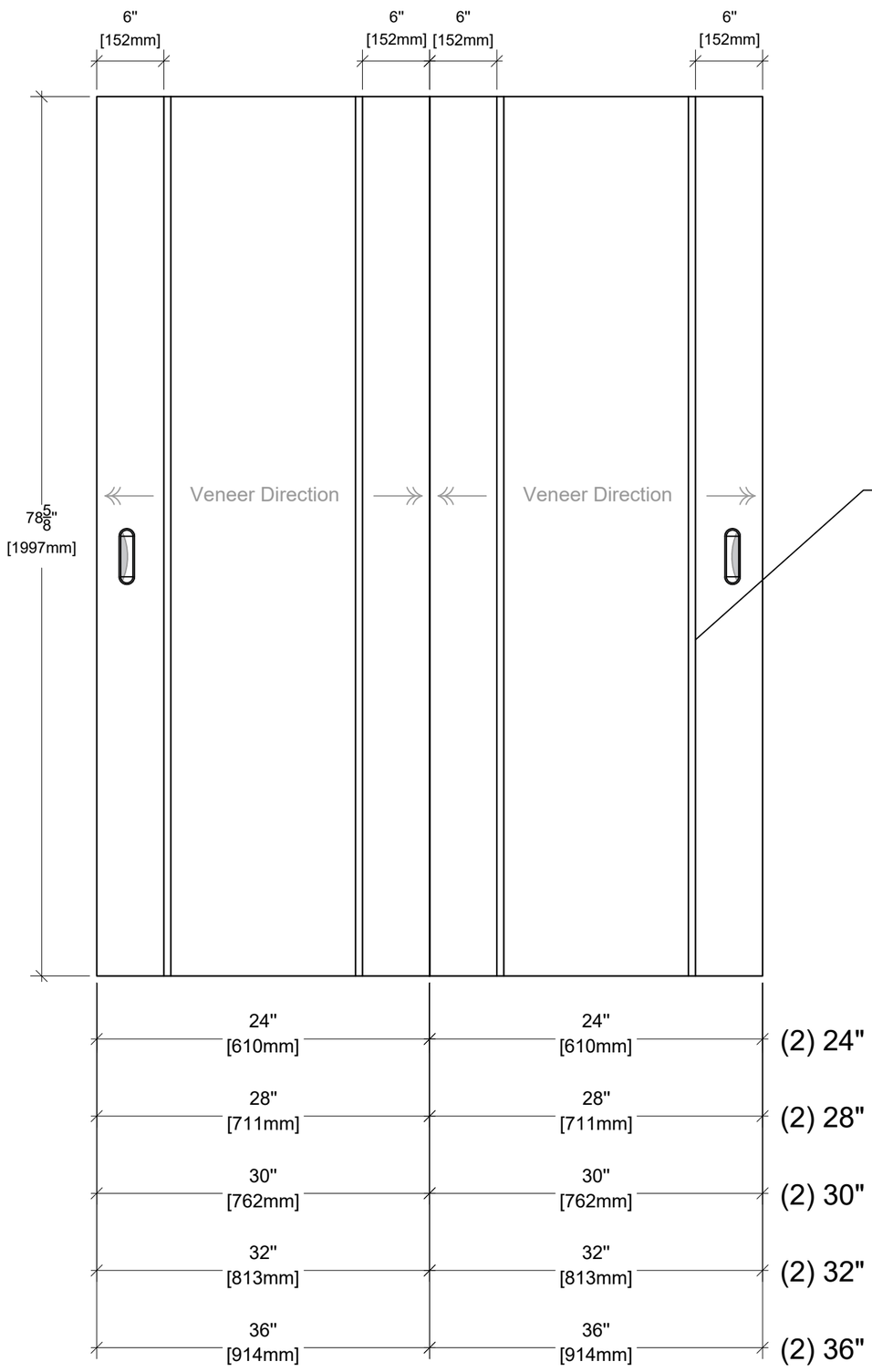

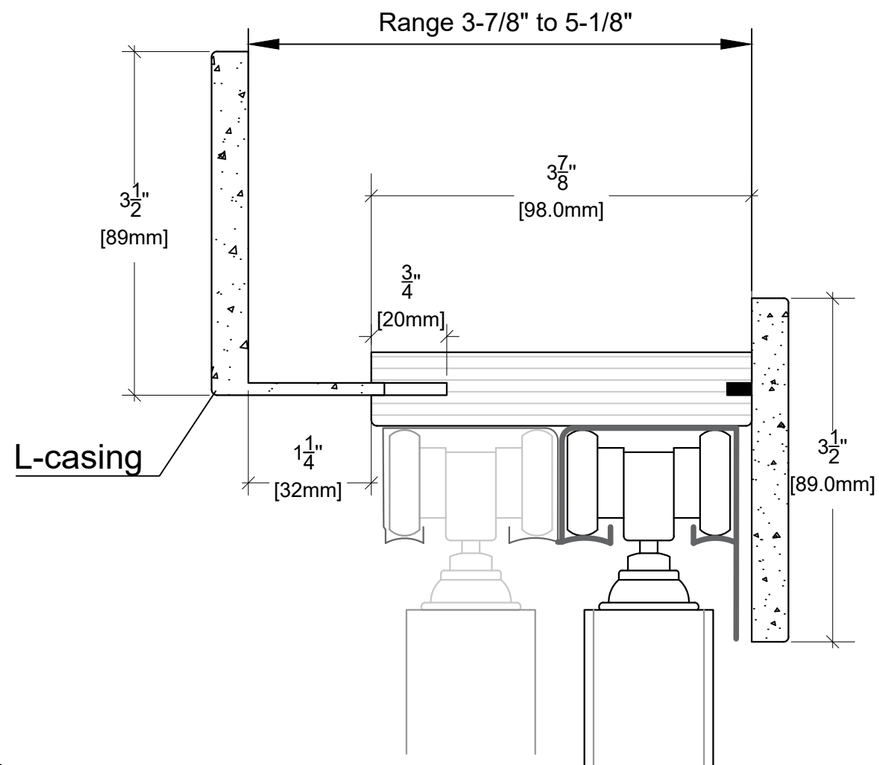

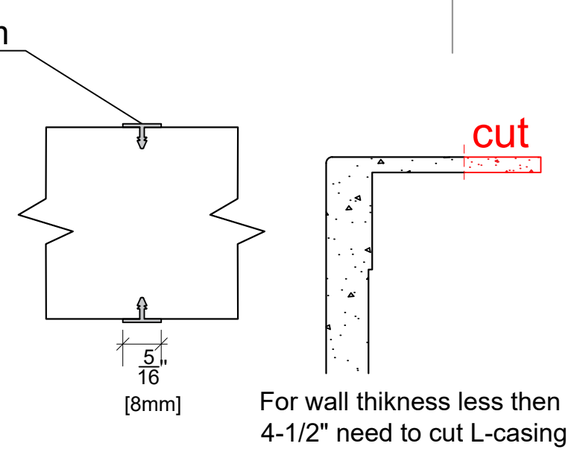

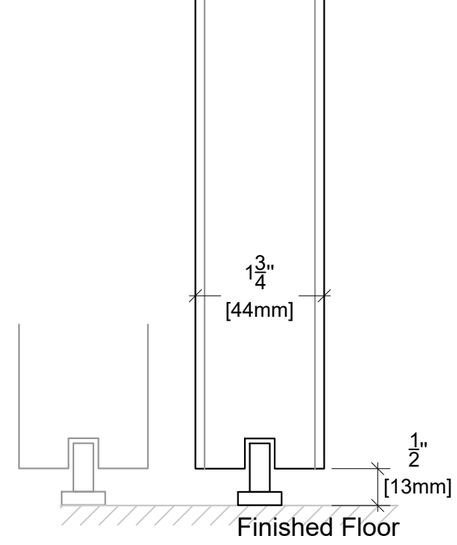

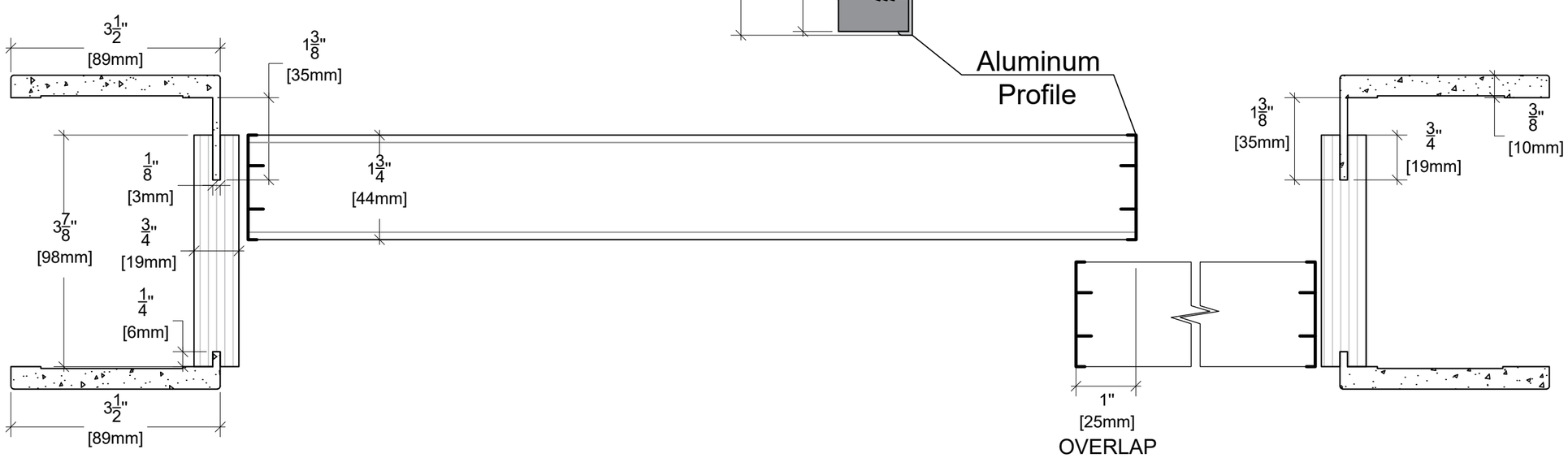

ALMES DOORS

Model: Alluminio - Elivia Horizontal Wood Grain 2VS

Configuration: Bypass 80"