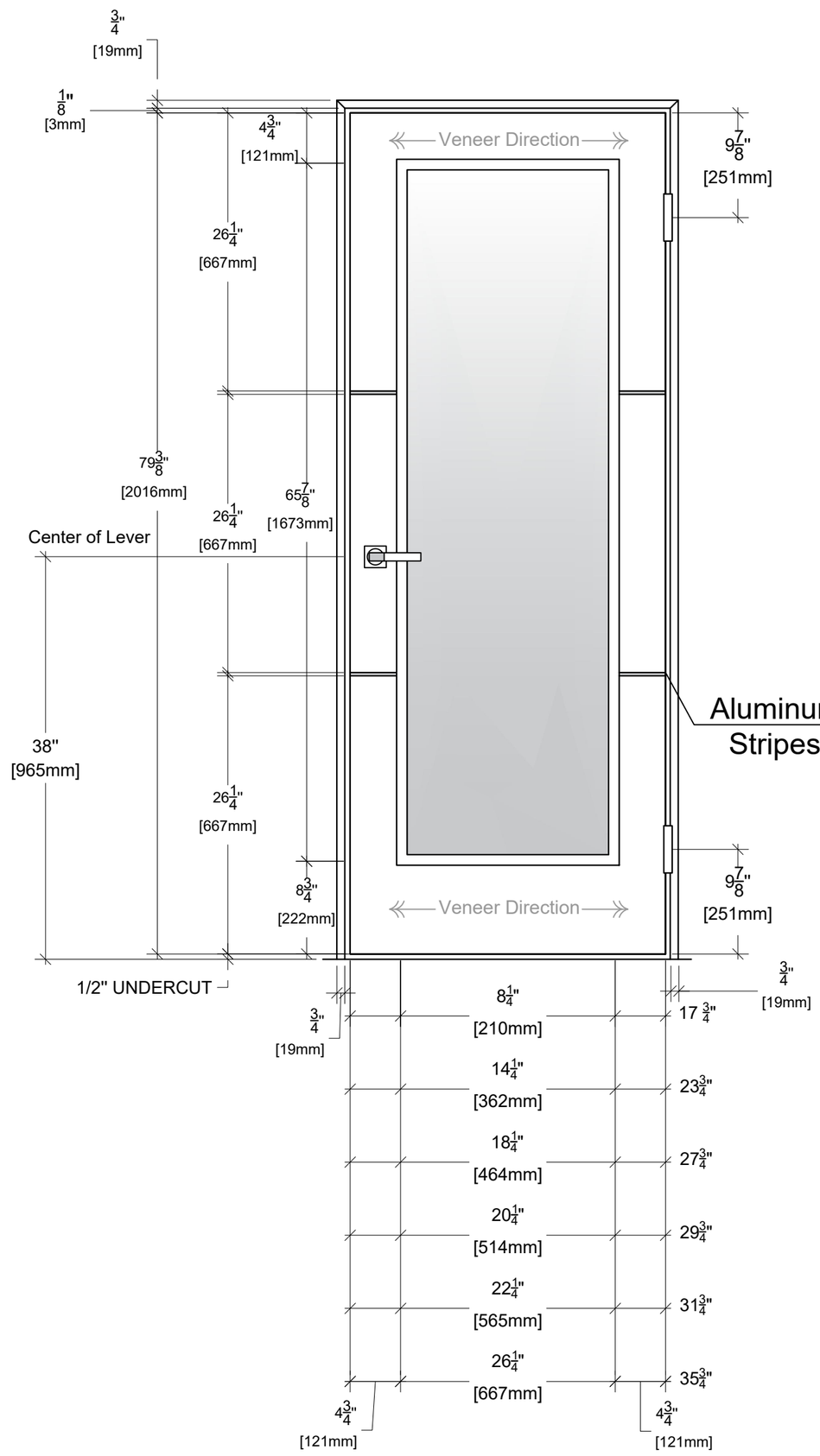

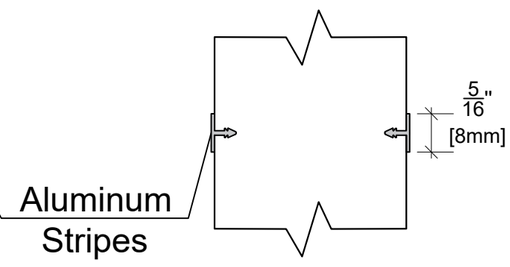

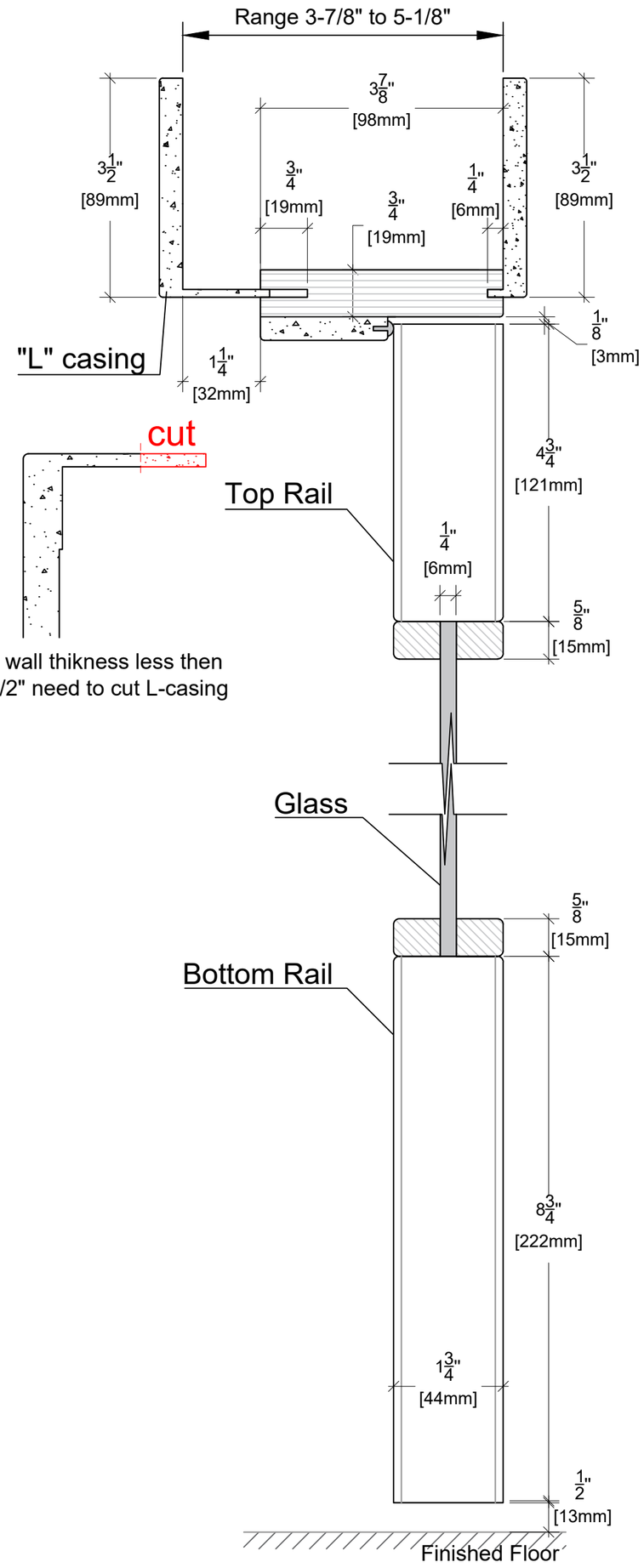

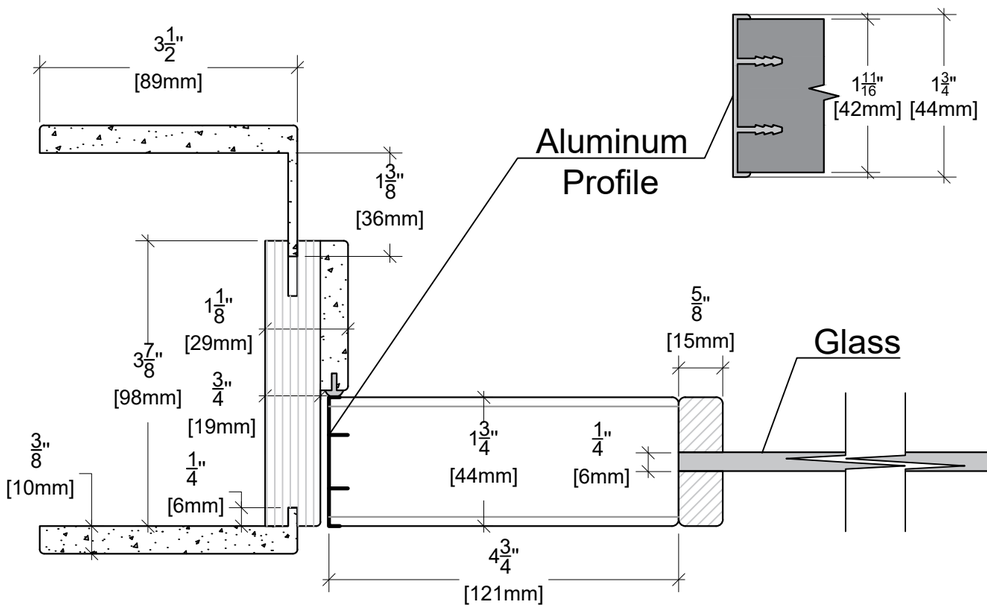

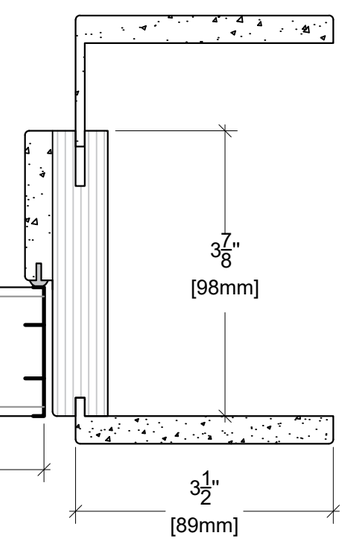

ALMES DOORS

Model: Alluminio - Elivia Horizontal Wood Grain La Luce 2HS

Configuration: Swing 80"