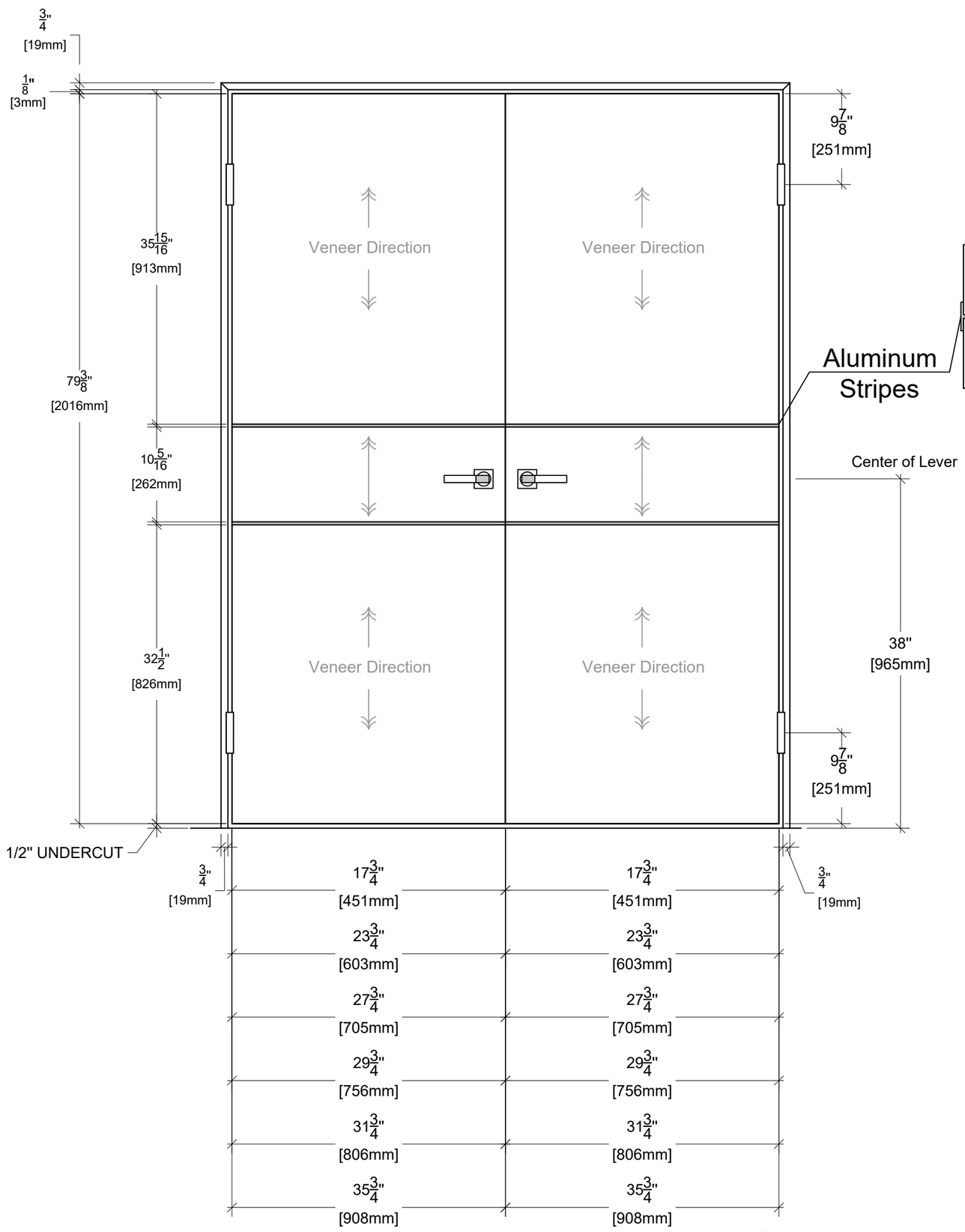

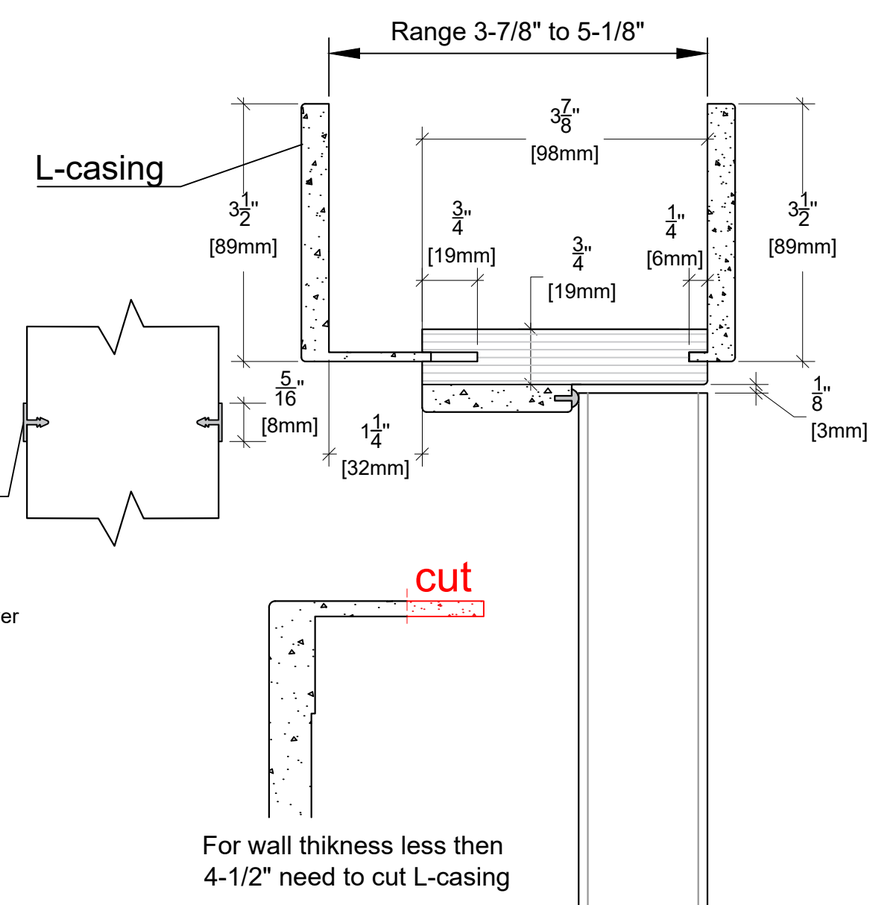

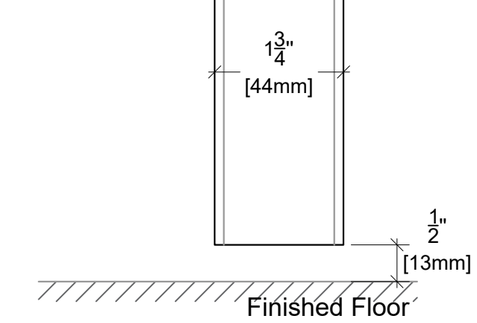

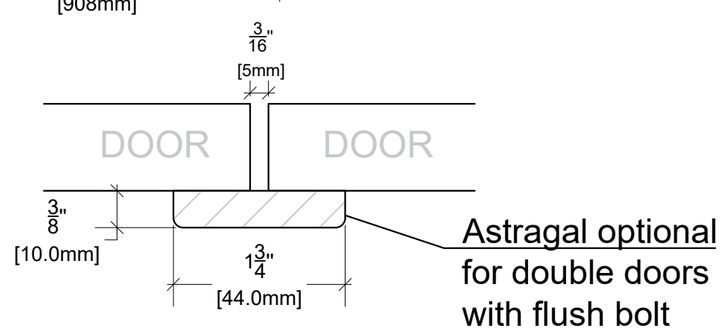

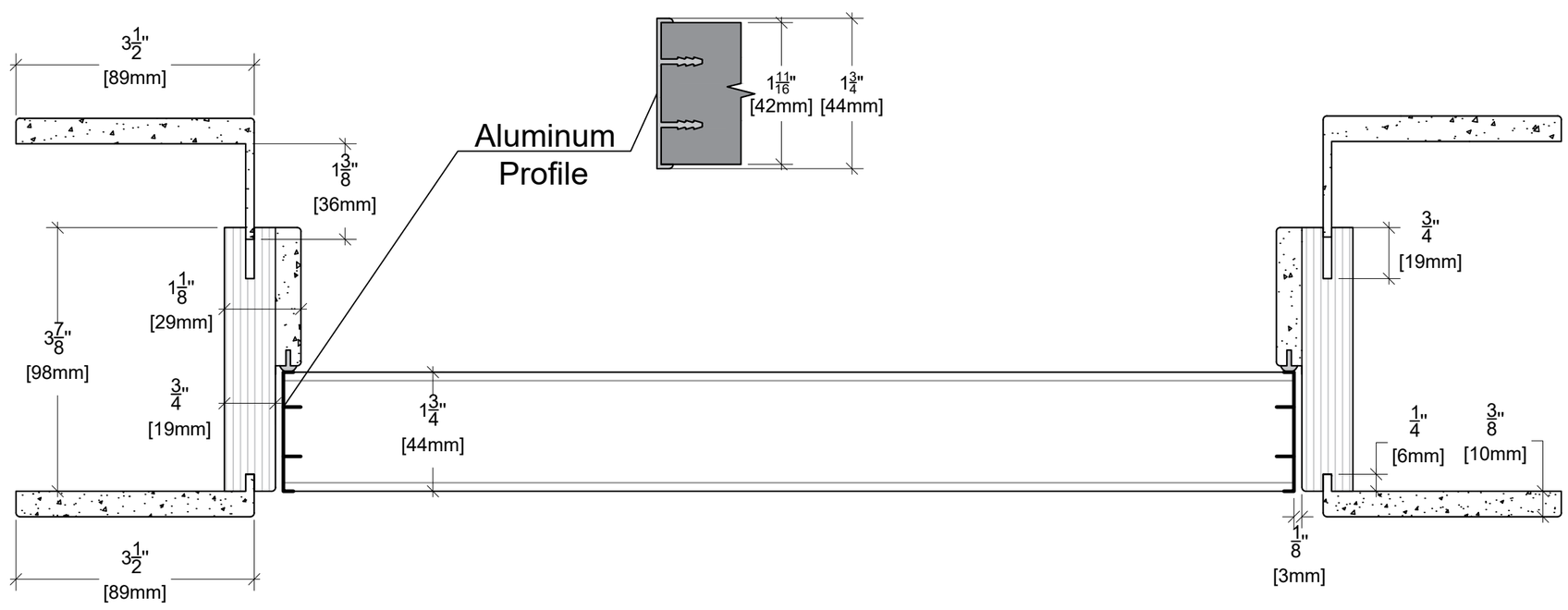

ALMES DOORS

Model: Alluminio - Elivia Vertical Wood Grain 2HS

Configuration: D Swing 80"