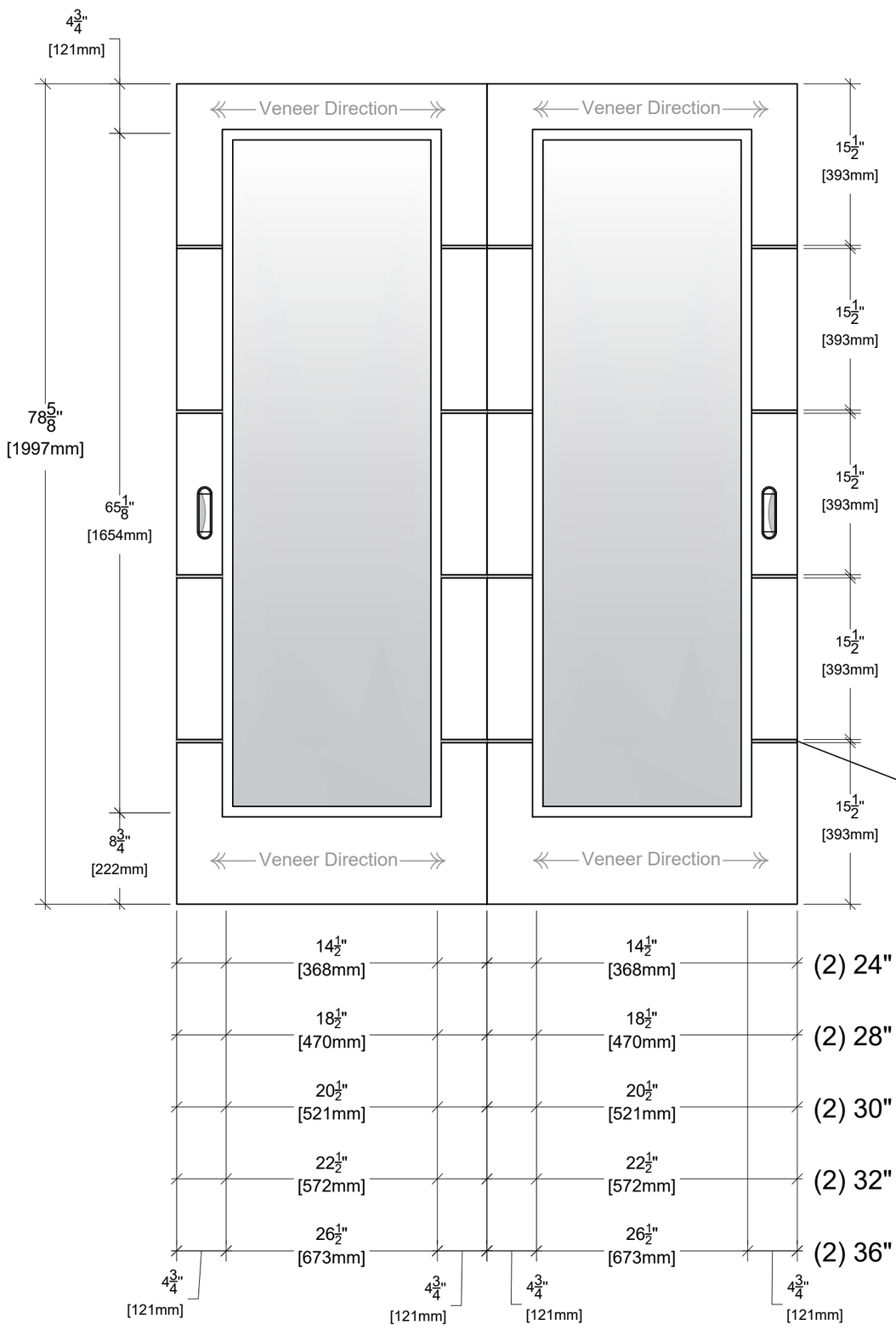

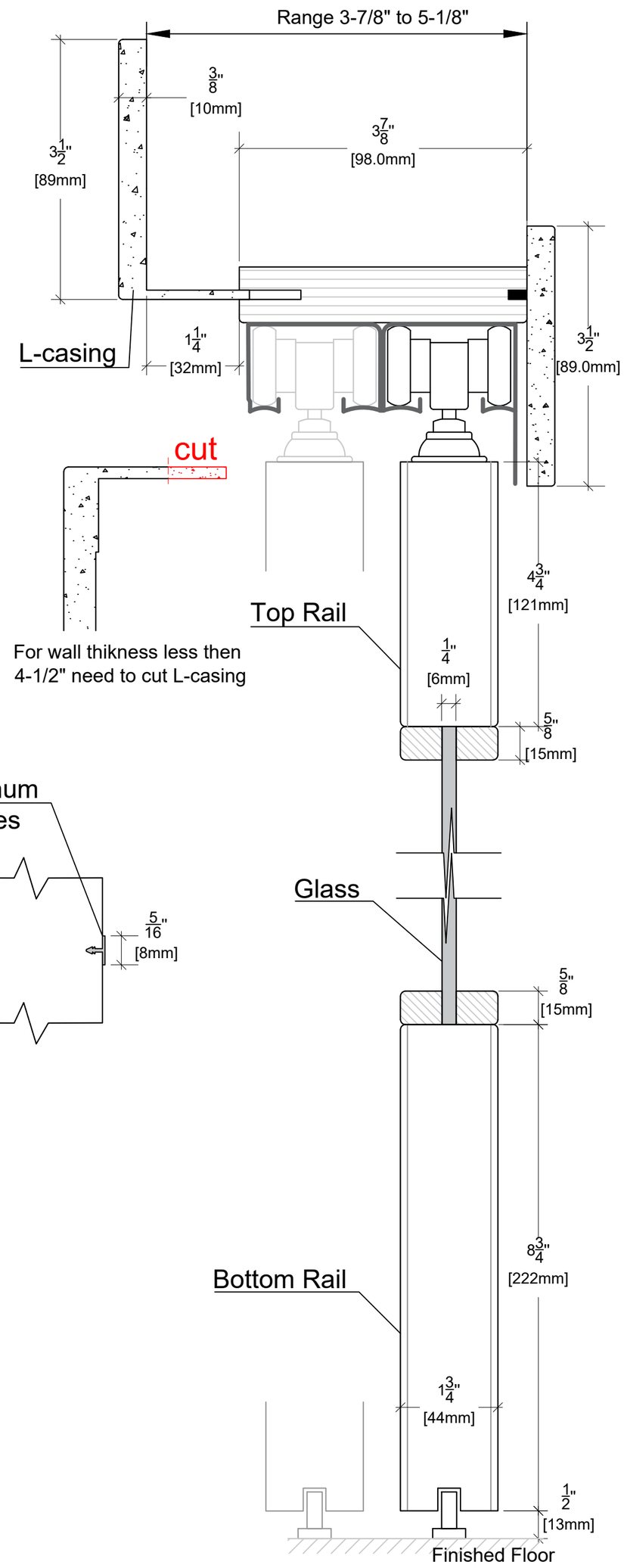

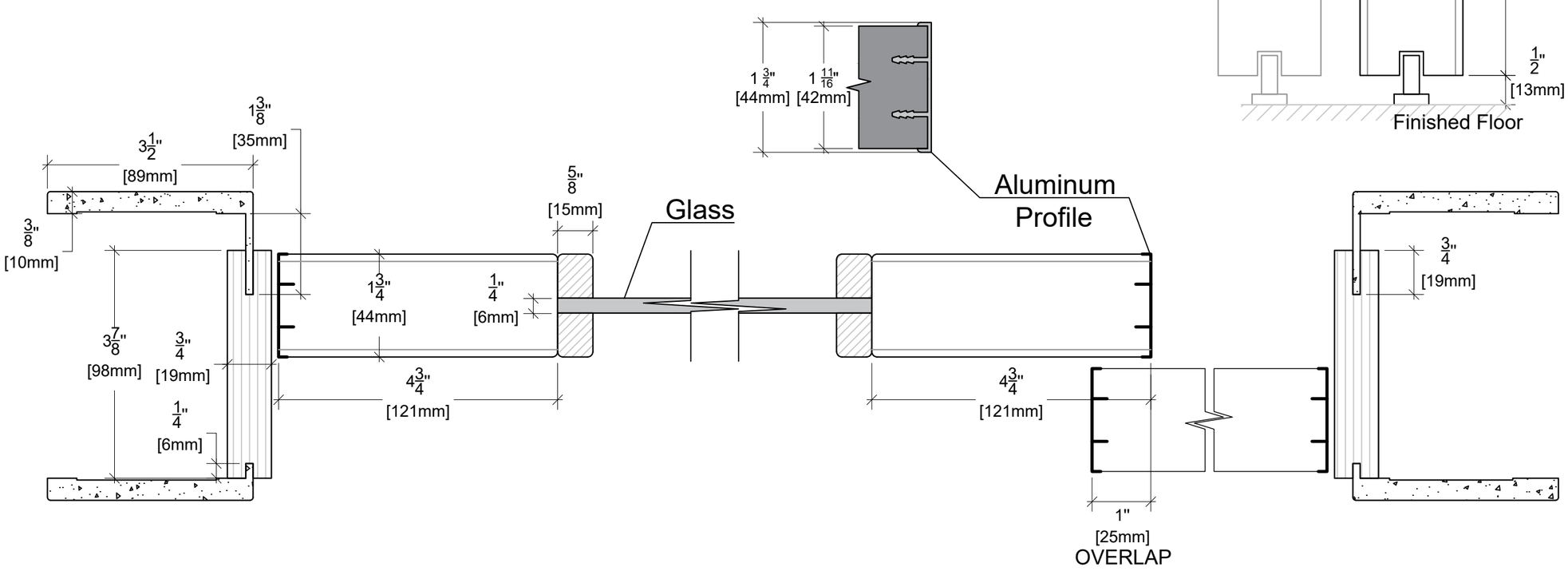

ALMES DOORS

Model: Alluminio - Elivia Horizontal Wood Grain La Luce 4HS

Configuration: Bypass 80"