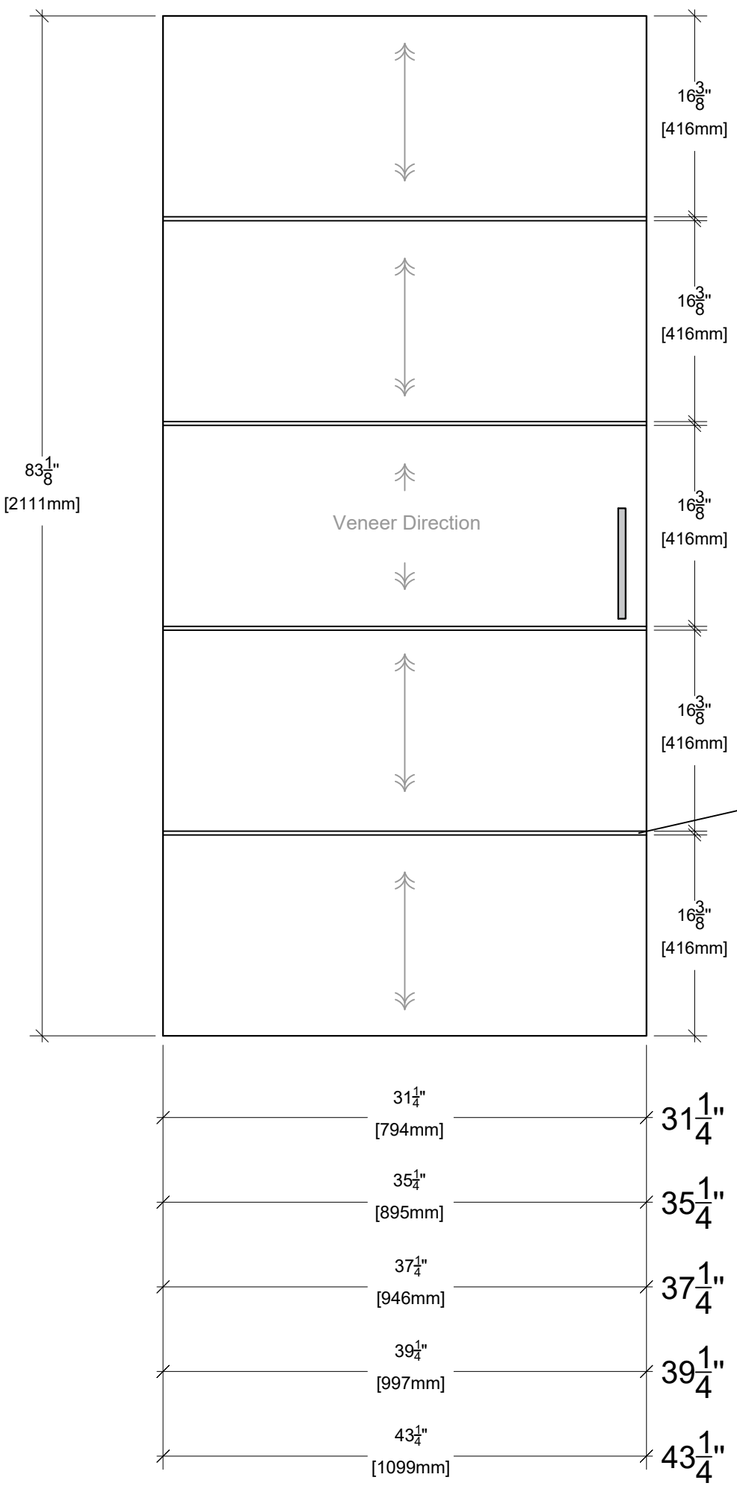

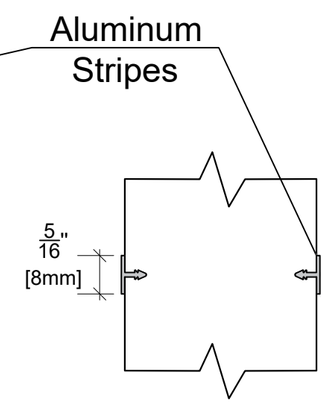

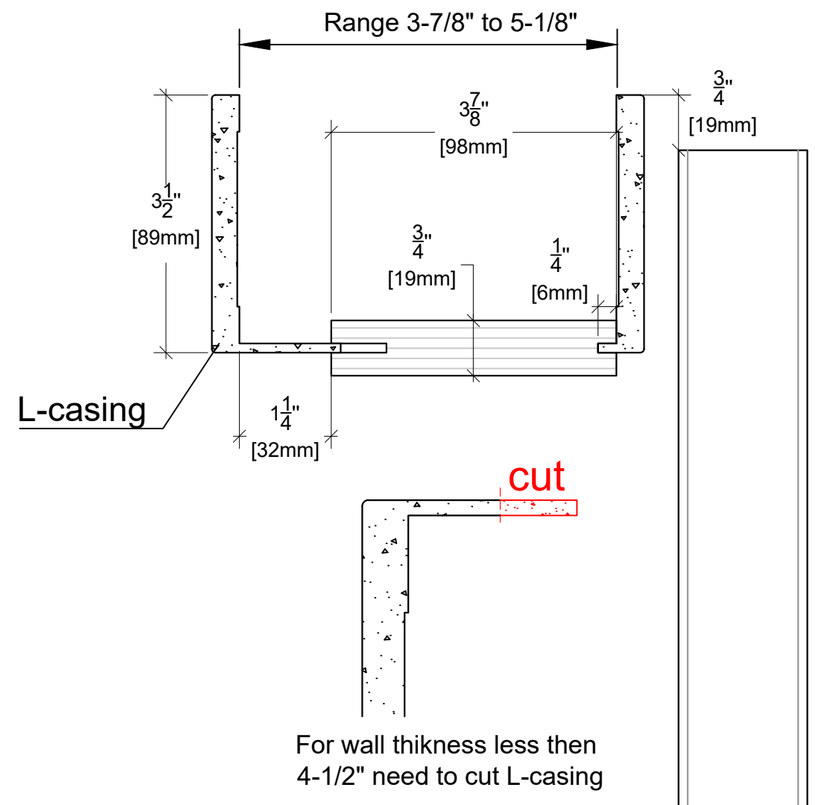

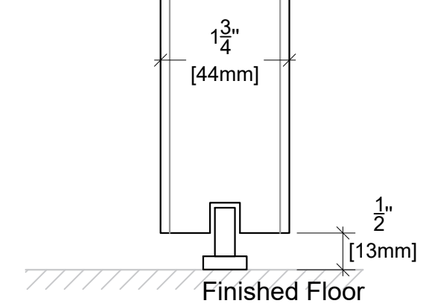

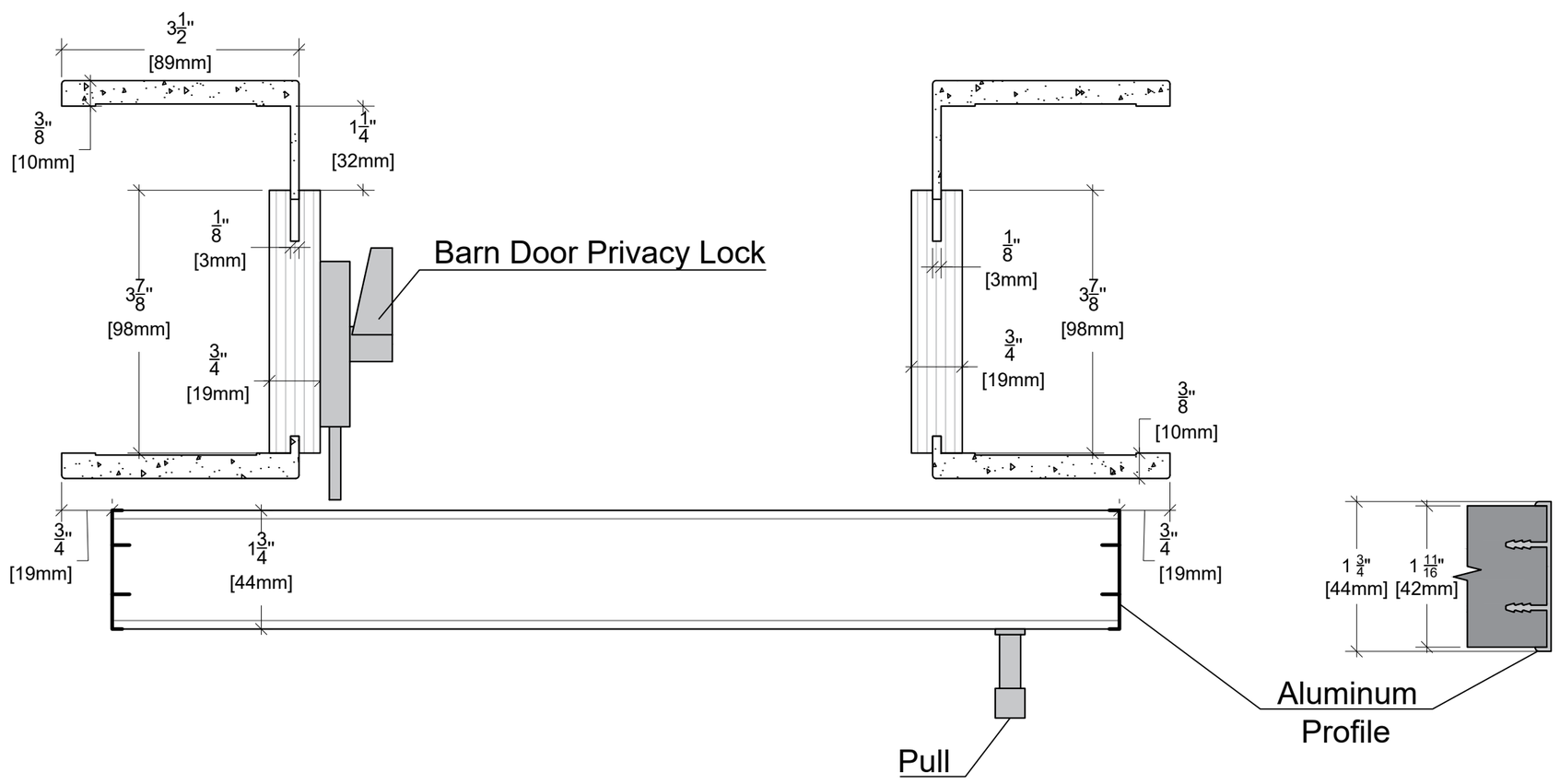

ALMES DOORS

Model: Alluminio - Elivia Vertical Wood Grain 4HS

Configuration: Barn 82"