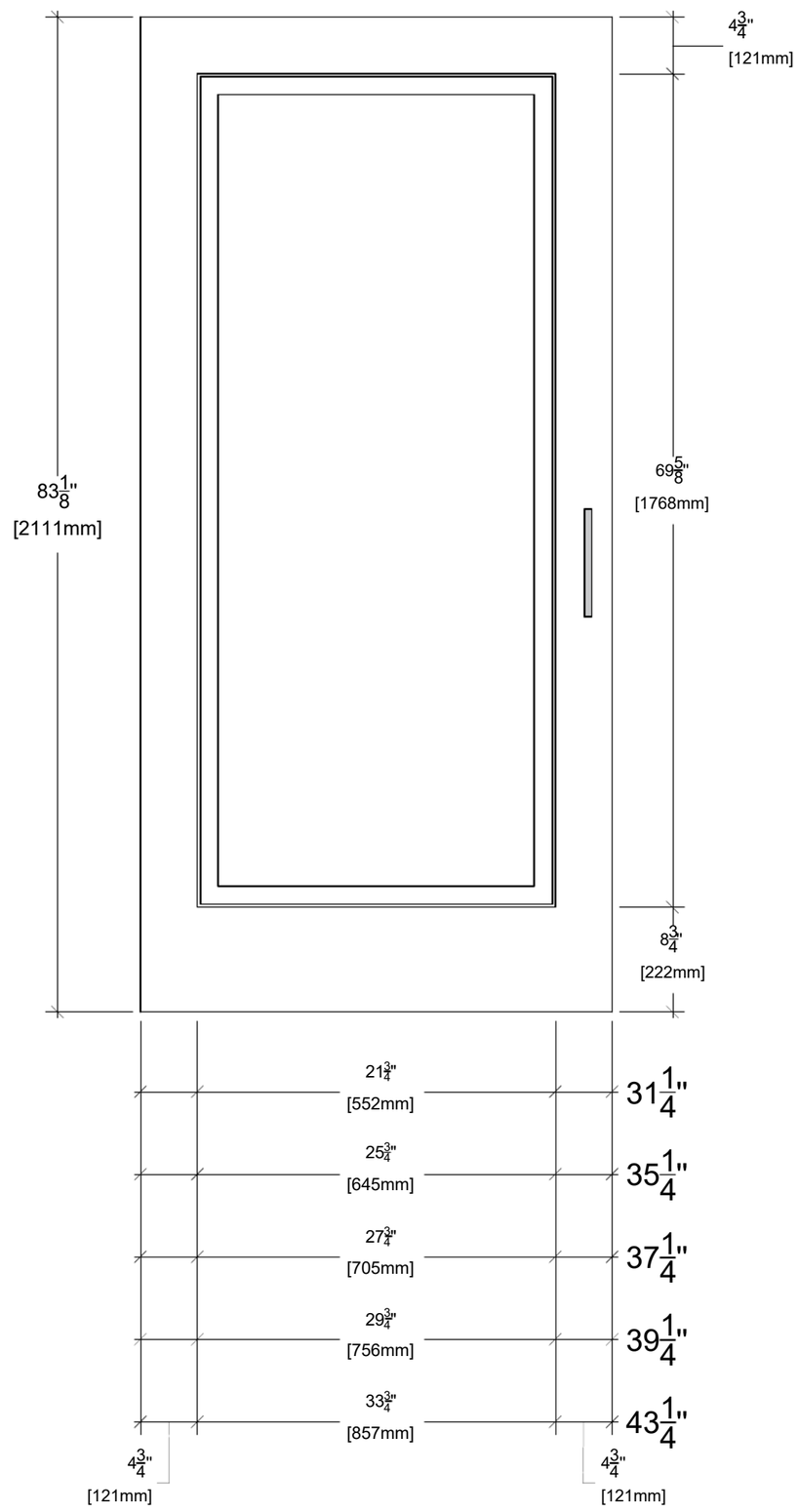

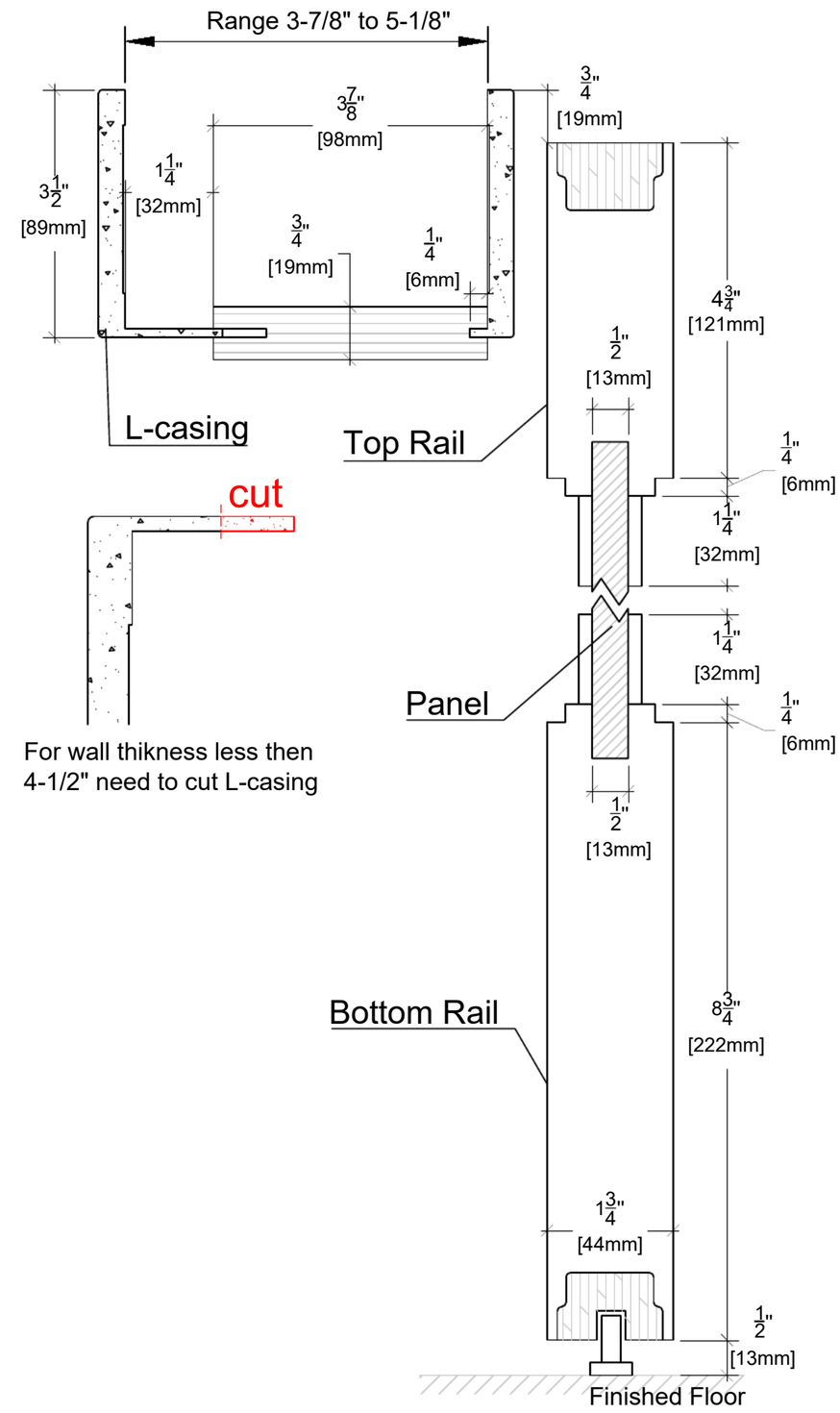

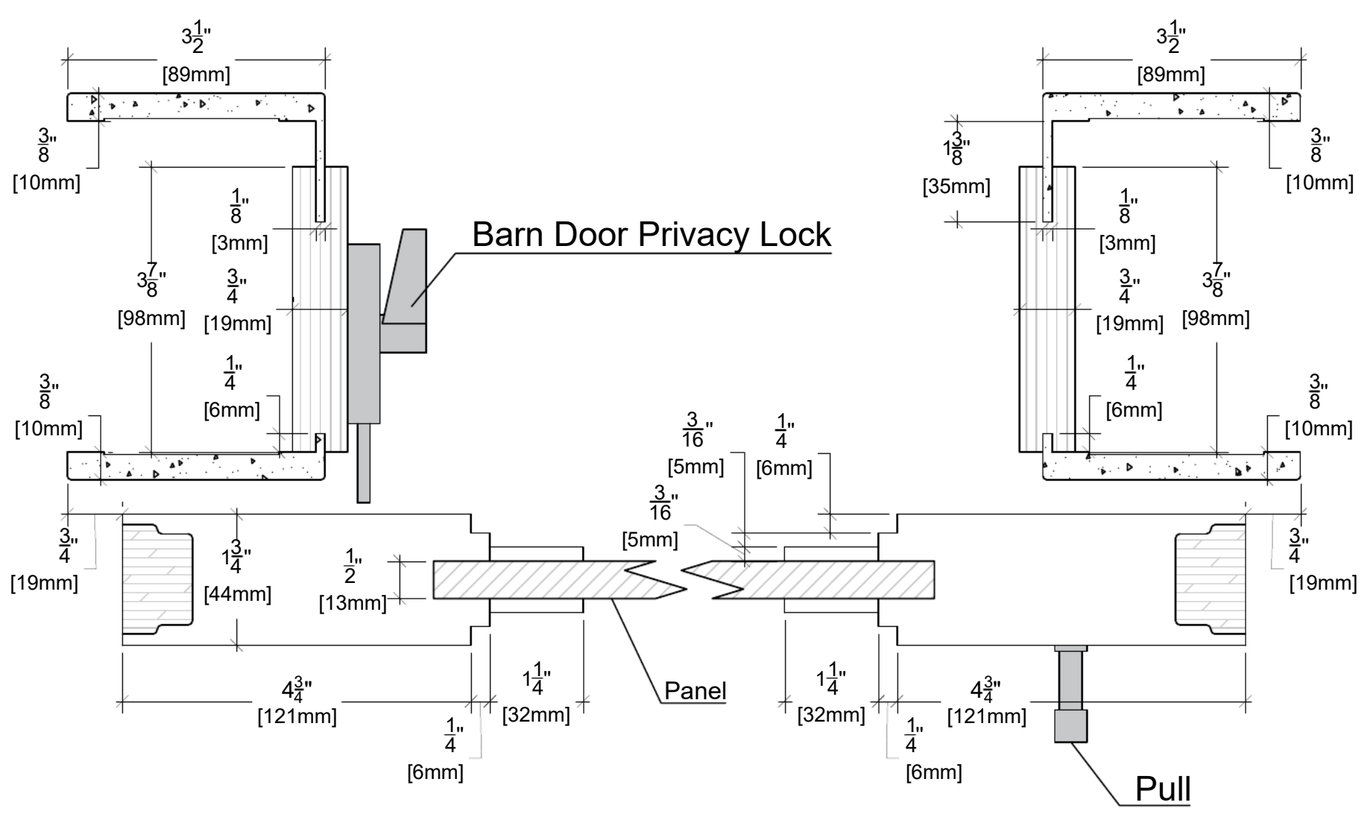

ALMES DOORS

Model: Cascade Style - Livio

Configuration: Barn 82"