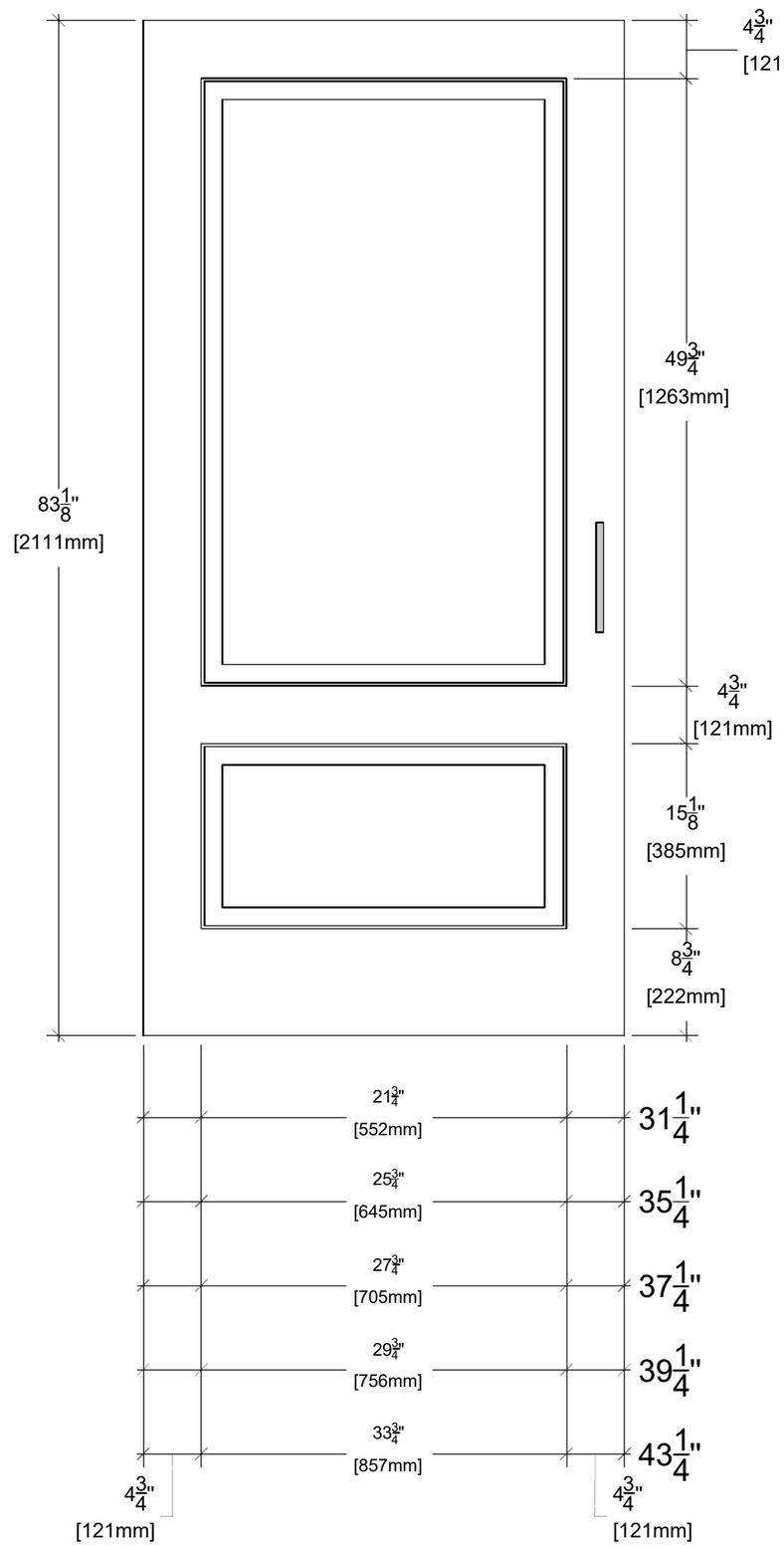

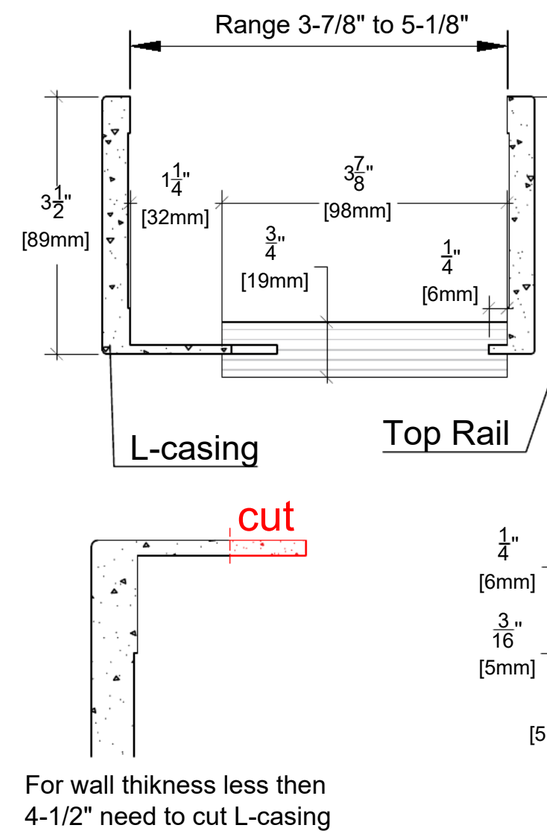

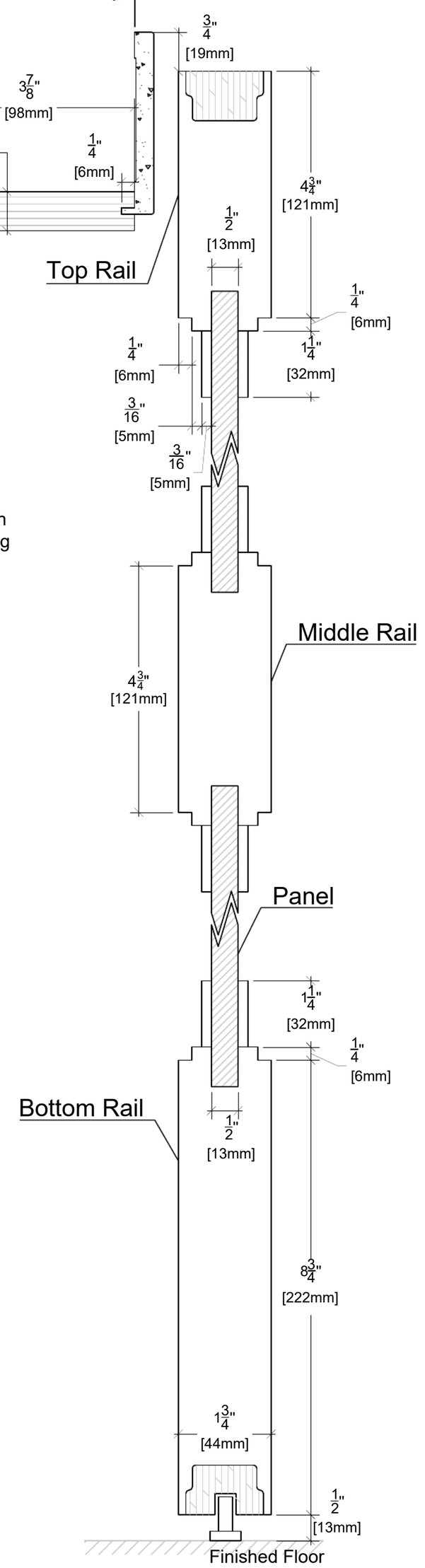

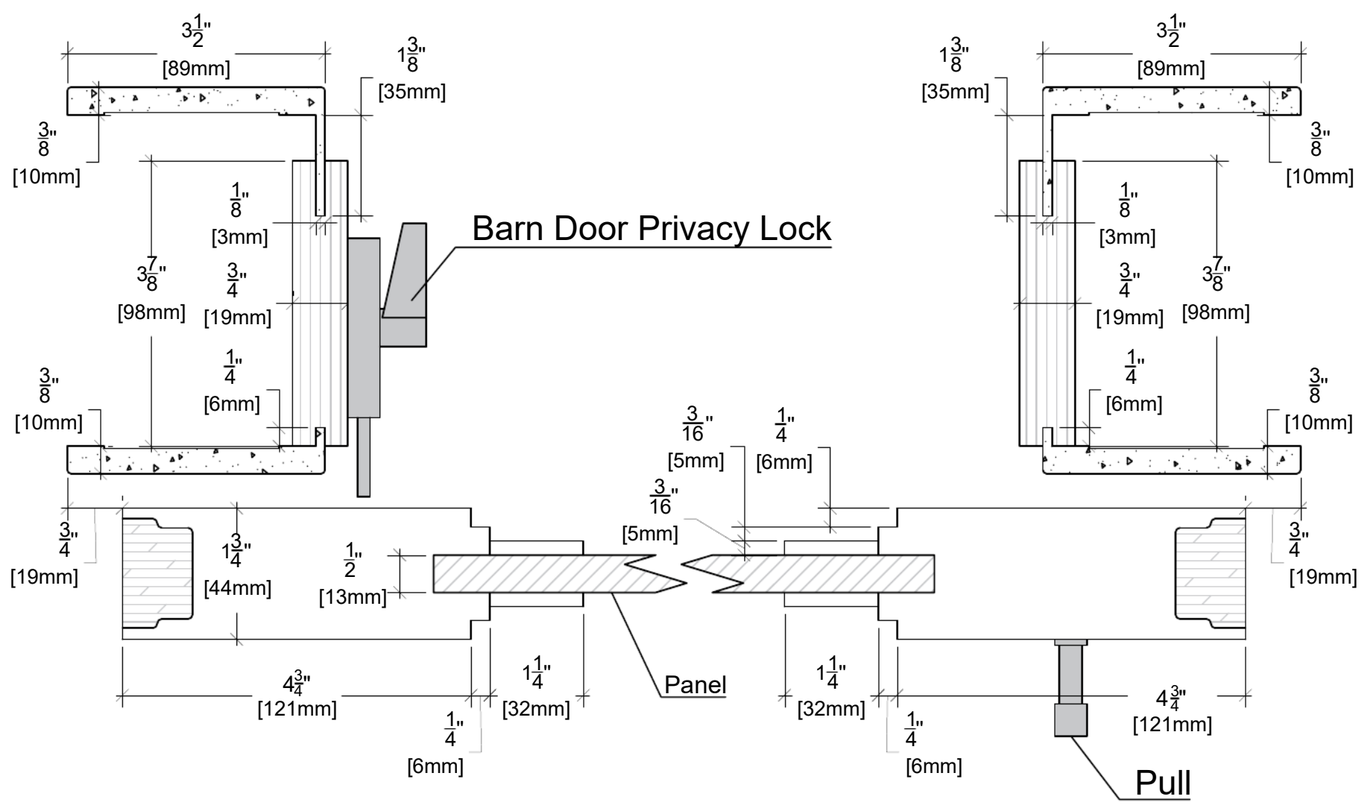

ALMES DOORS

Model: Cascade Style - Eduardo

Configuration: Barn 82"