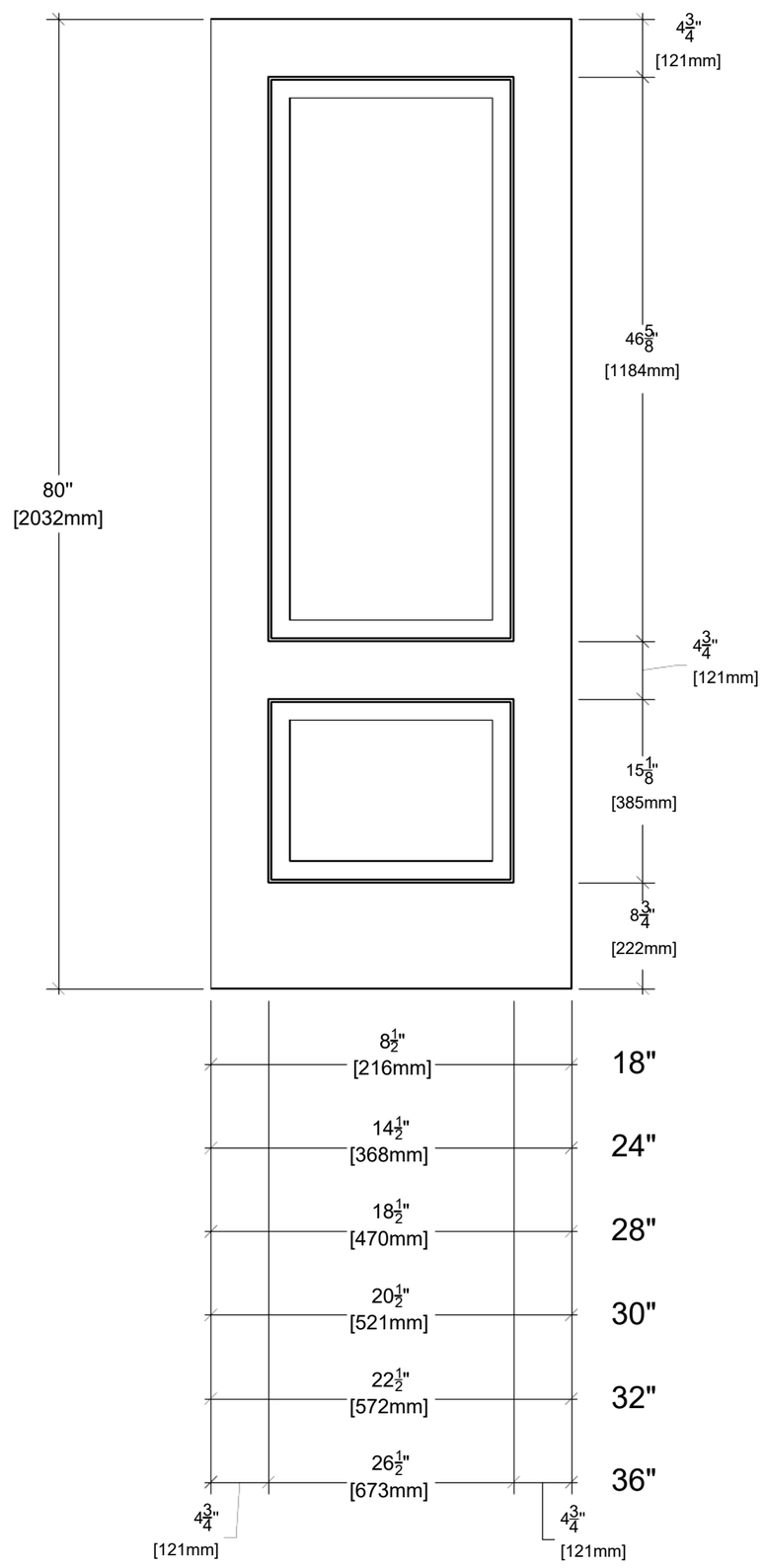

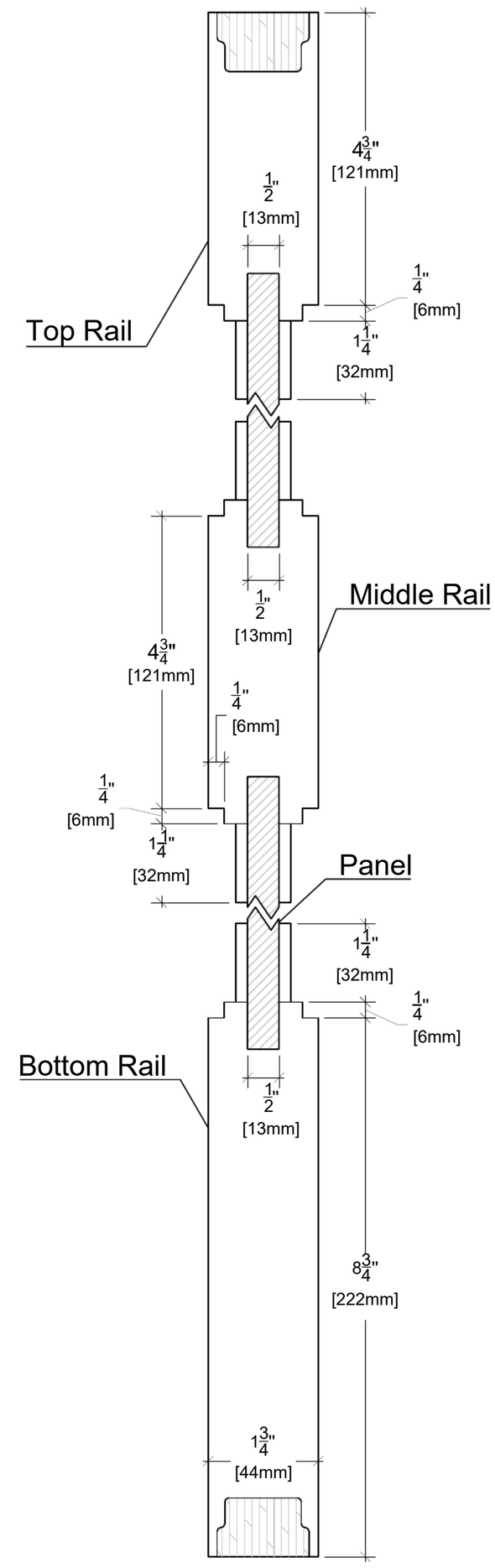

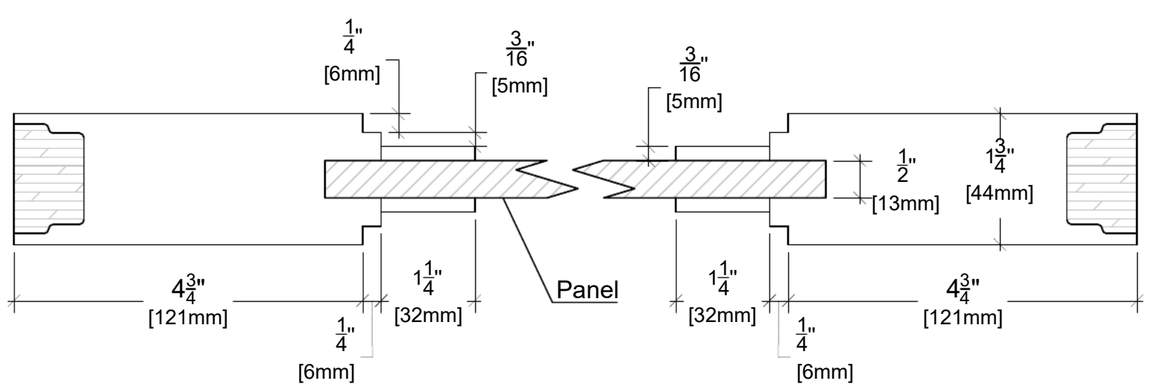

ALMES DOORS

Model: Cascade Style - Eduardo

Configuration: Slab 84"