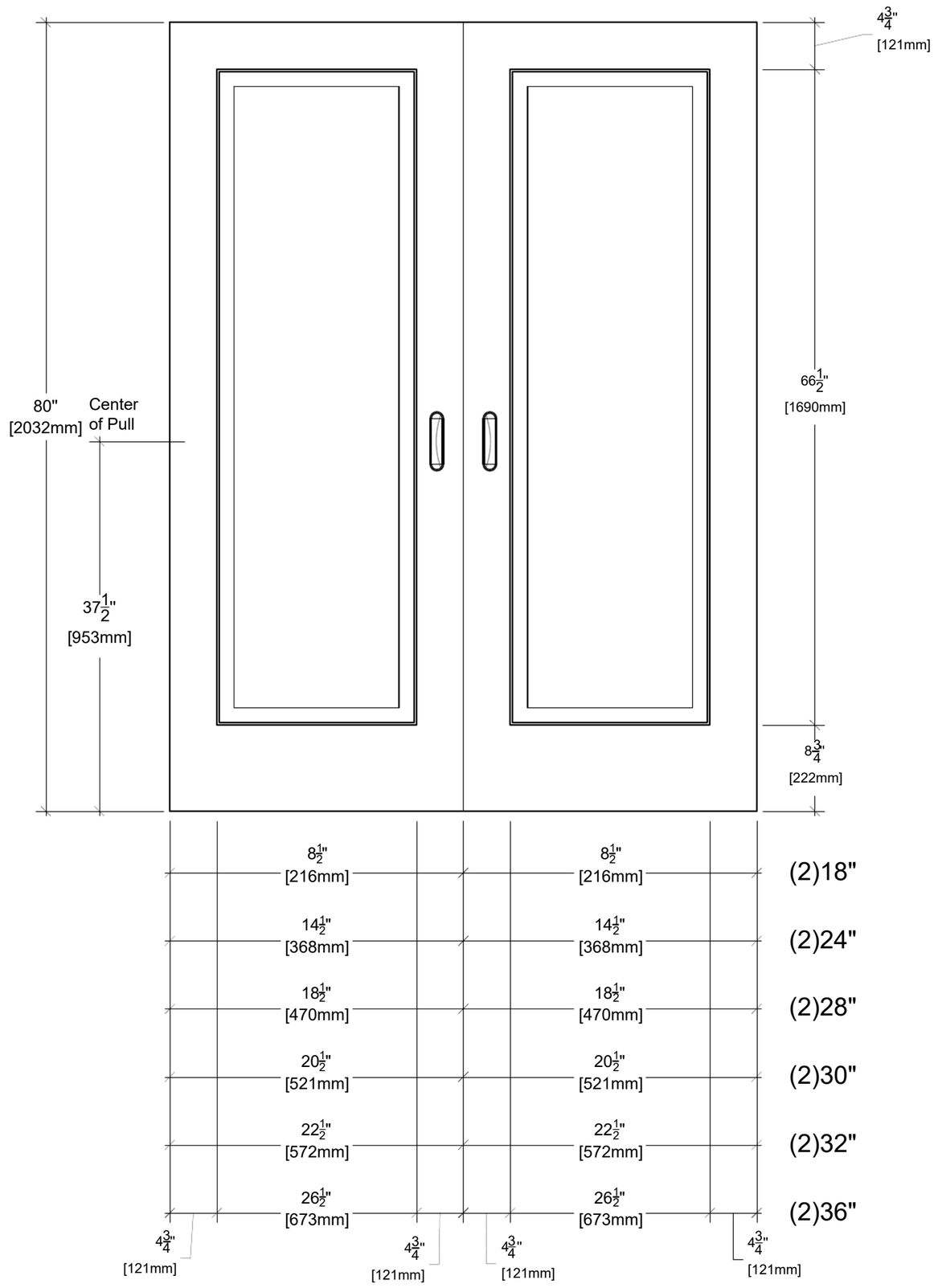

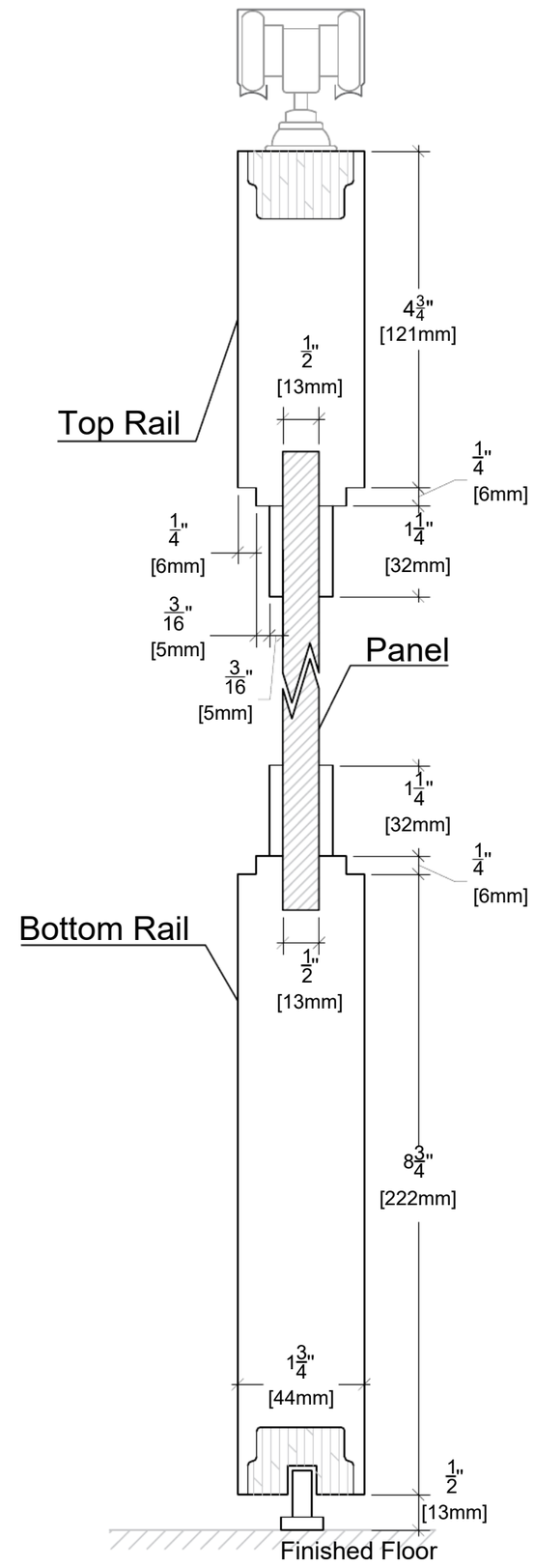

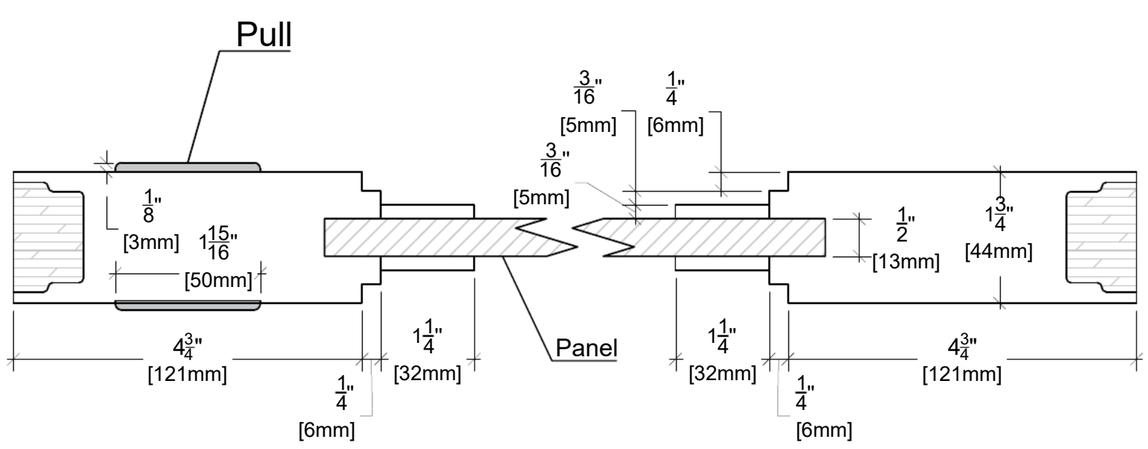

ALMES DOORS

Model: Cascade Style - Livio

Configuration: D Pocket 80"