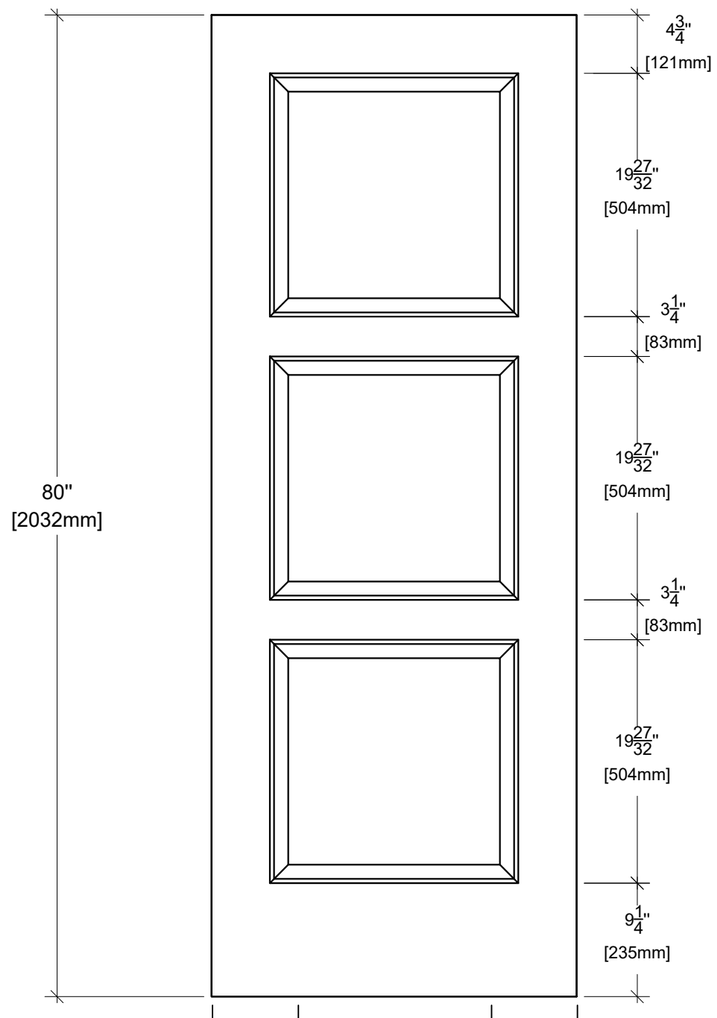

stile		stile	
2 3/8" [60mm]	7 1/4" [184mm]	2 3/8" [60mm]	12
2 3/8" [60mm]	8 1/4" [210mm]	2 3/8" [60mm]	13
2 3/8" [60mm]	9 1/4" [235mm]	2 3/8" [60mm]	14
2 3/8" [60mm]	10 1/4" [260mm]	2 3/8" [60mm]	15
2 3/8" [60mm]	11 1/4" [286mm]	2 3/8" [60mm]	16
4 3/4" [121mm]	8 1/2" [216mm]	4 3/4" [121mm]	18
4 3/4" [121mm]	14 1/2" [368mm]	4 3/4" [121mm]	24
4 3/4" [121mm]	18 1/2" [470mm]	4 3/4" [121mm]	28
4 3/4" [121mm]	20 1/2" [521mm]	4 3/4" [121mm]	30
4 3/4" [121mm]	22 1/2" [572mm]	4 3/4" [121mm]	32
4 3/4" [121mm]	26 1/2" [673mm]	4 3/4" [121mm]	36

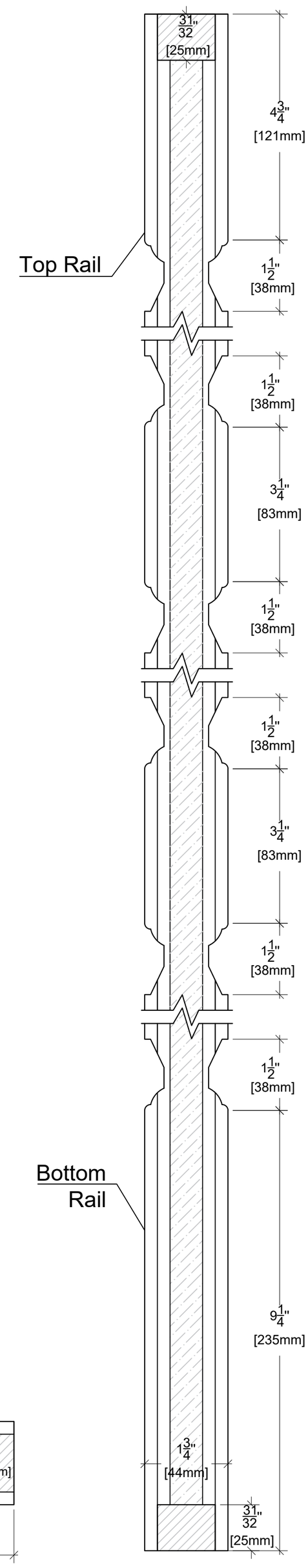

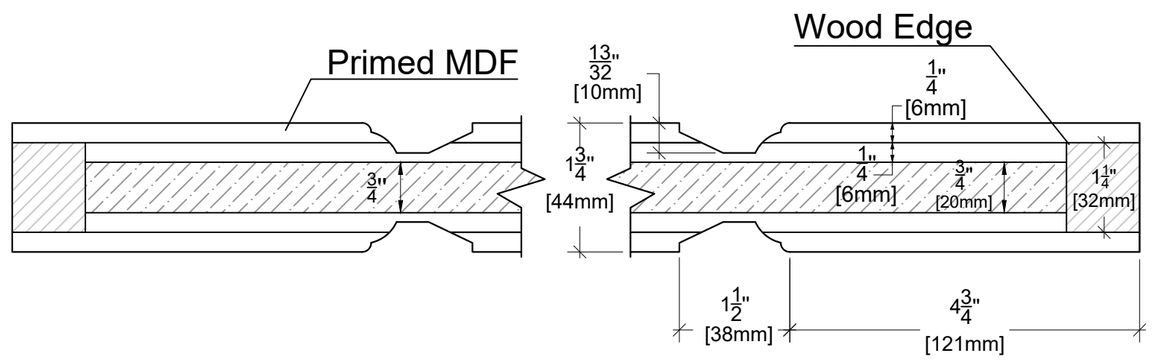

ALMES DOORS

Model: Manhattan Chic - Astor

Configuration: Slab 80"