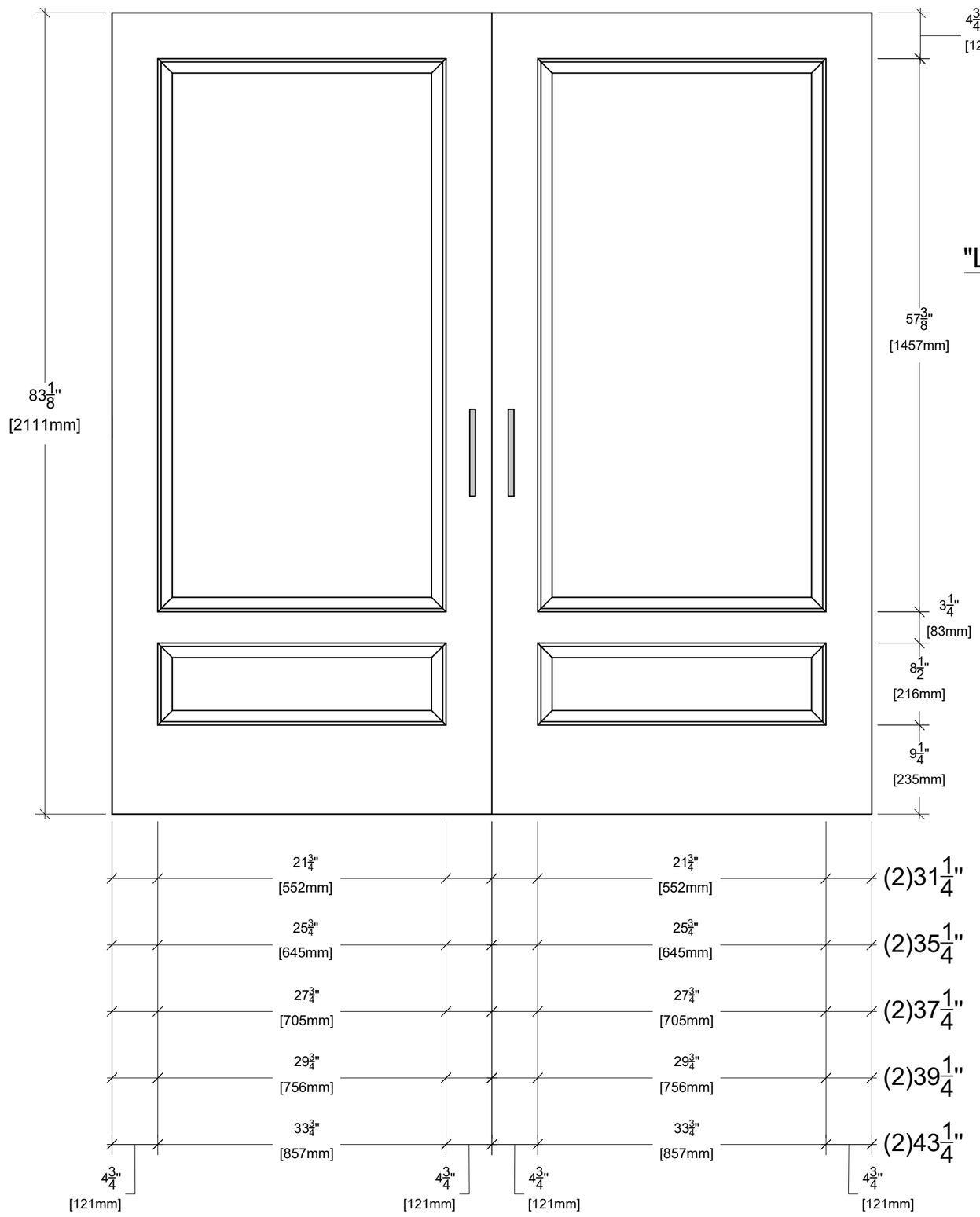

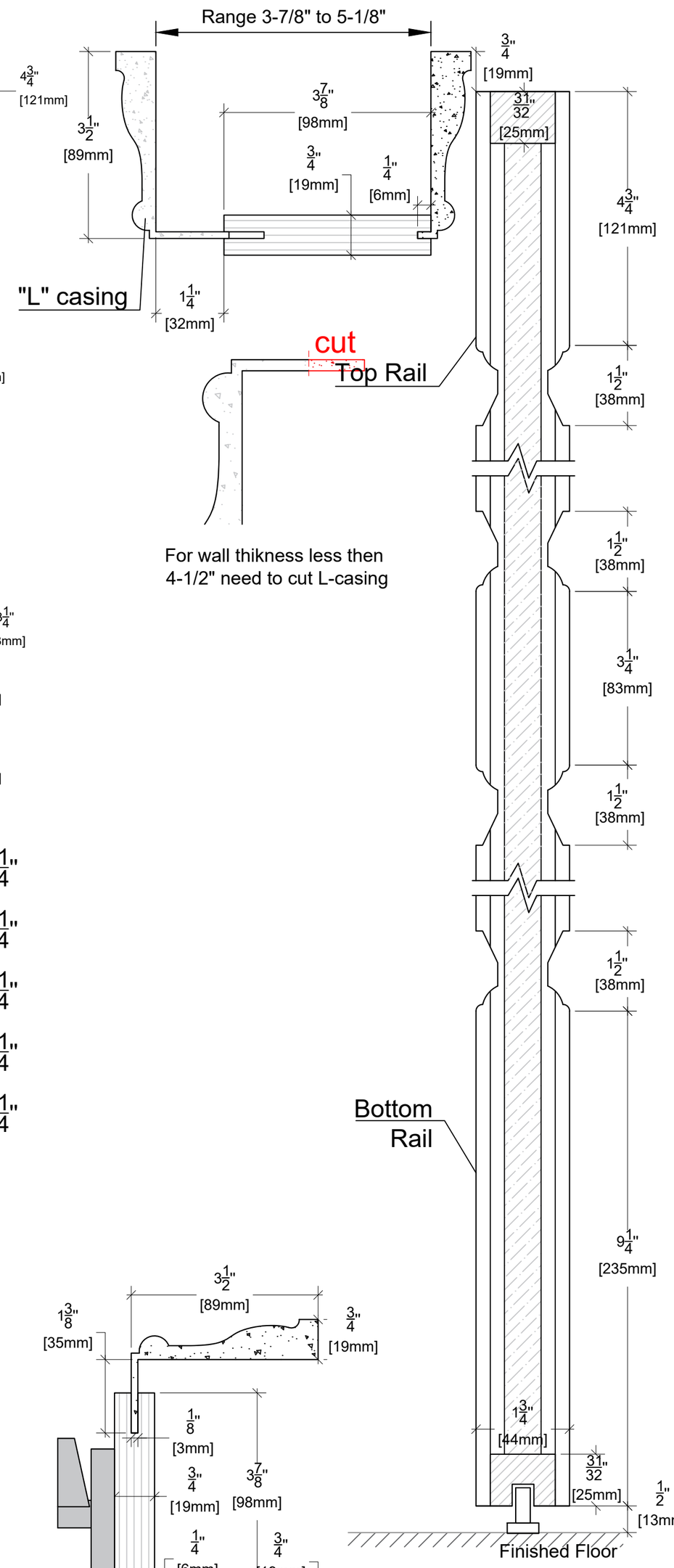

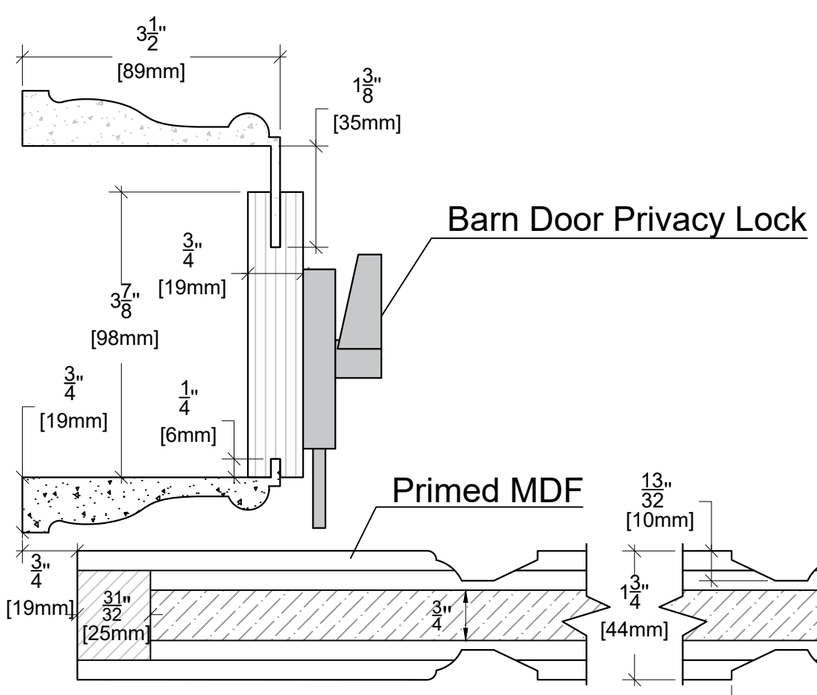

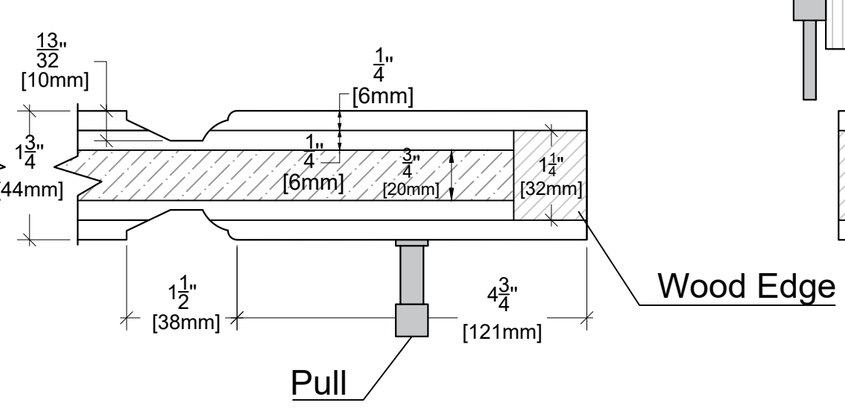

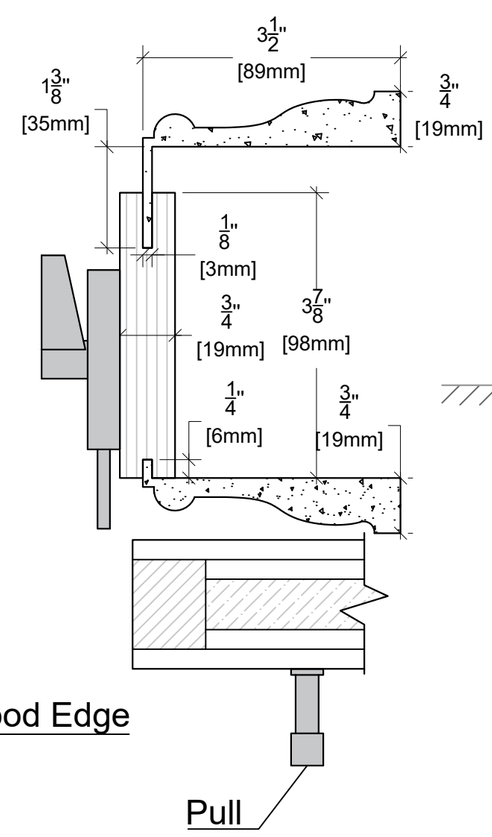

ALMES DOORS

Model: Manhattan Chic - Gramercy

Configuration: D Barn 82"