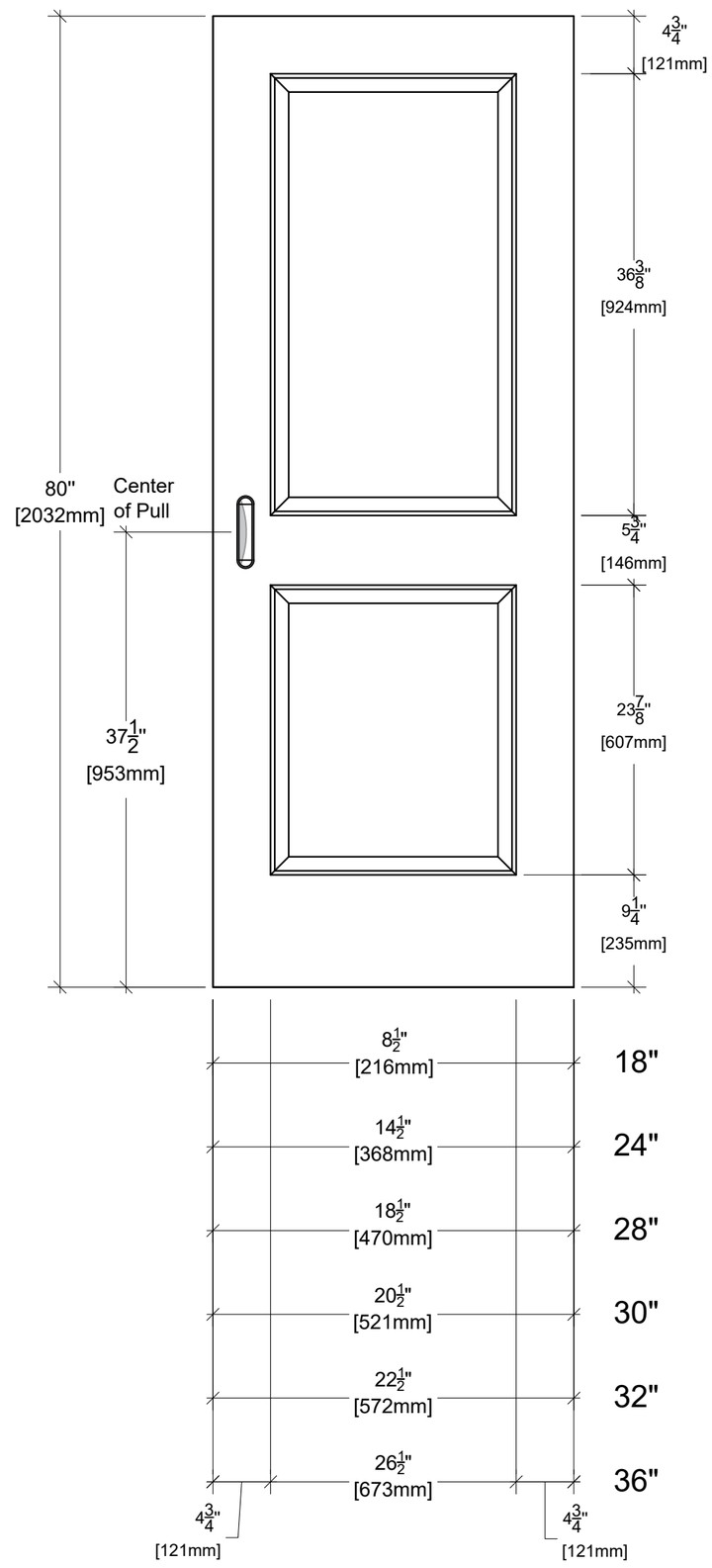

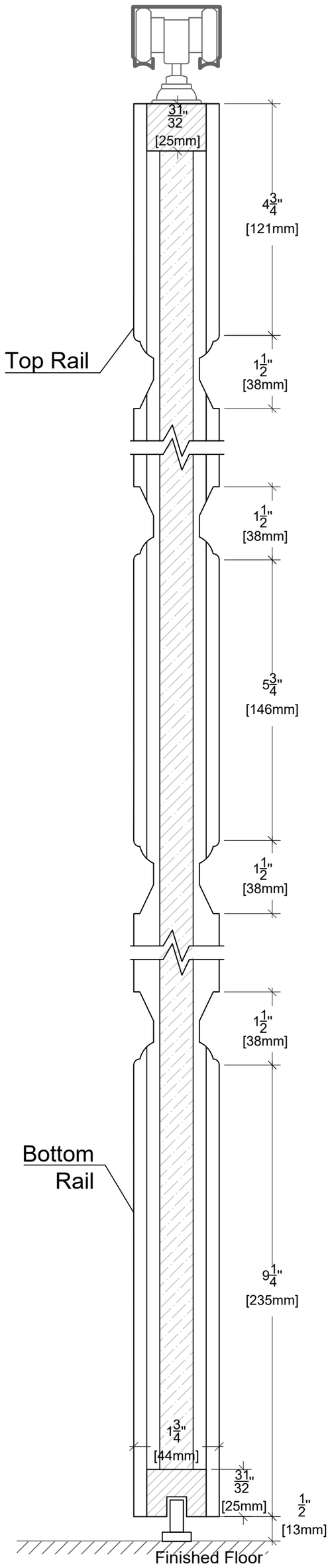

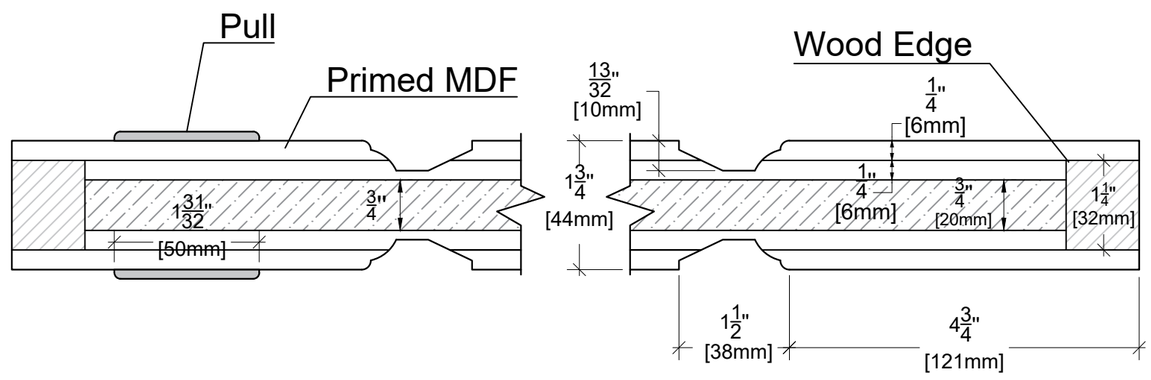

Model: Manhattan Chic - Greenwich

Configuration: Pocket 80"