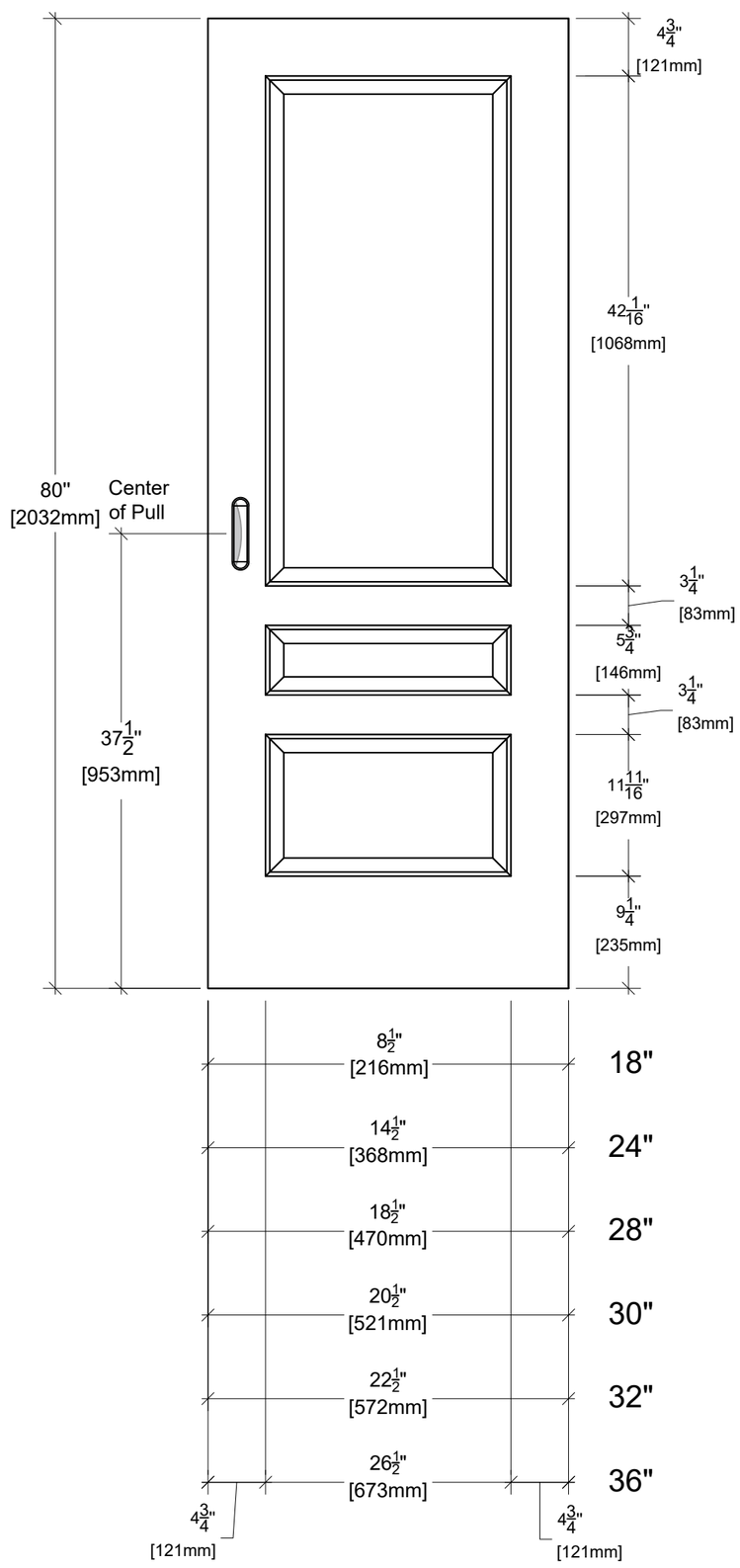


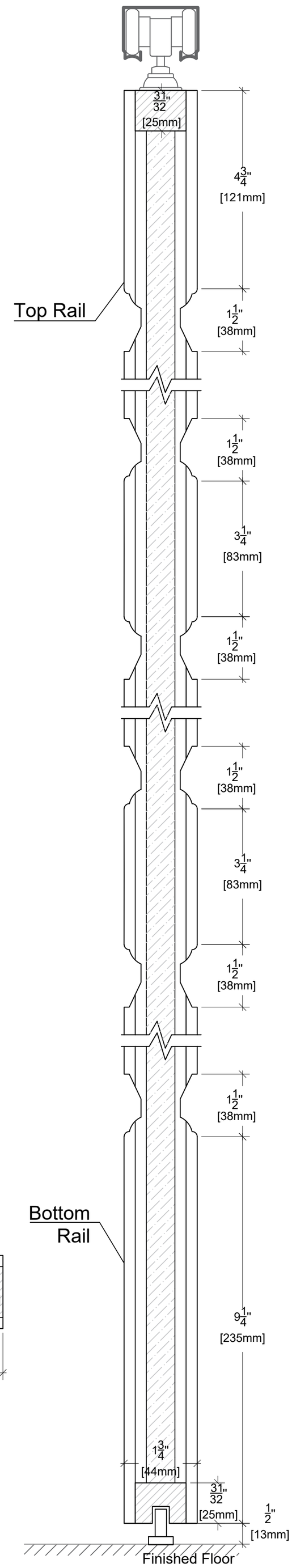


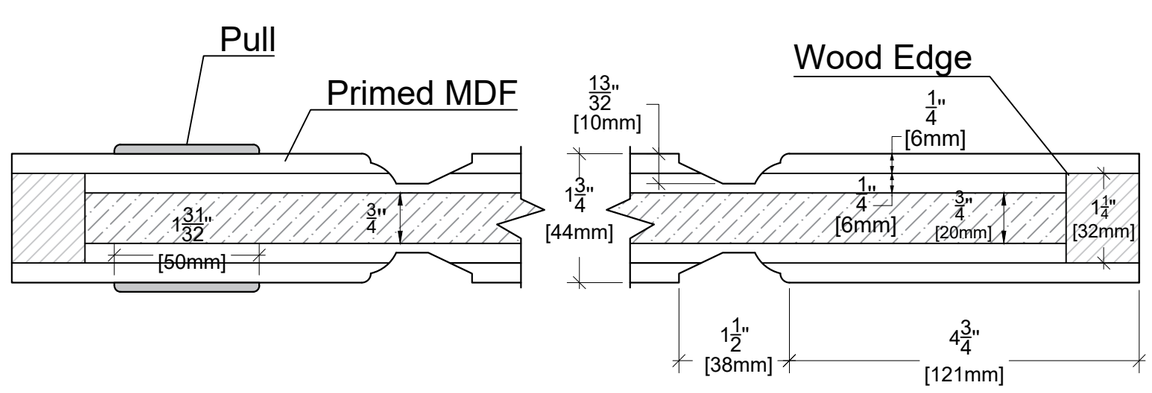


ALMES DOORS

Model: Manhattan Chic - Hudson

Configuration: Pocket 80"