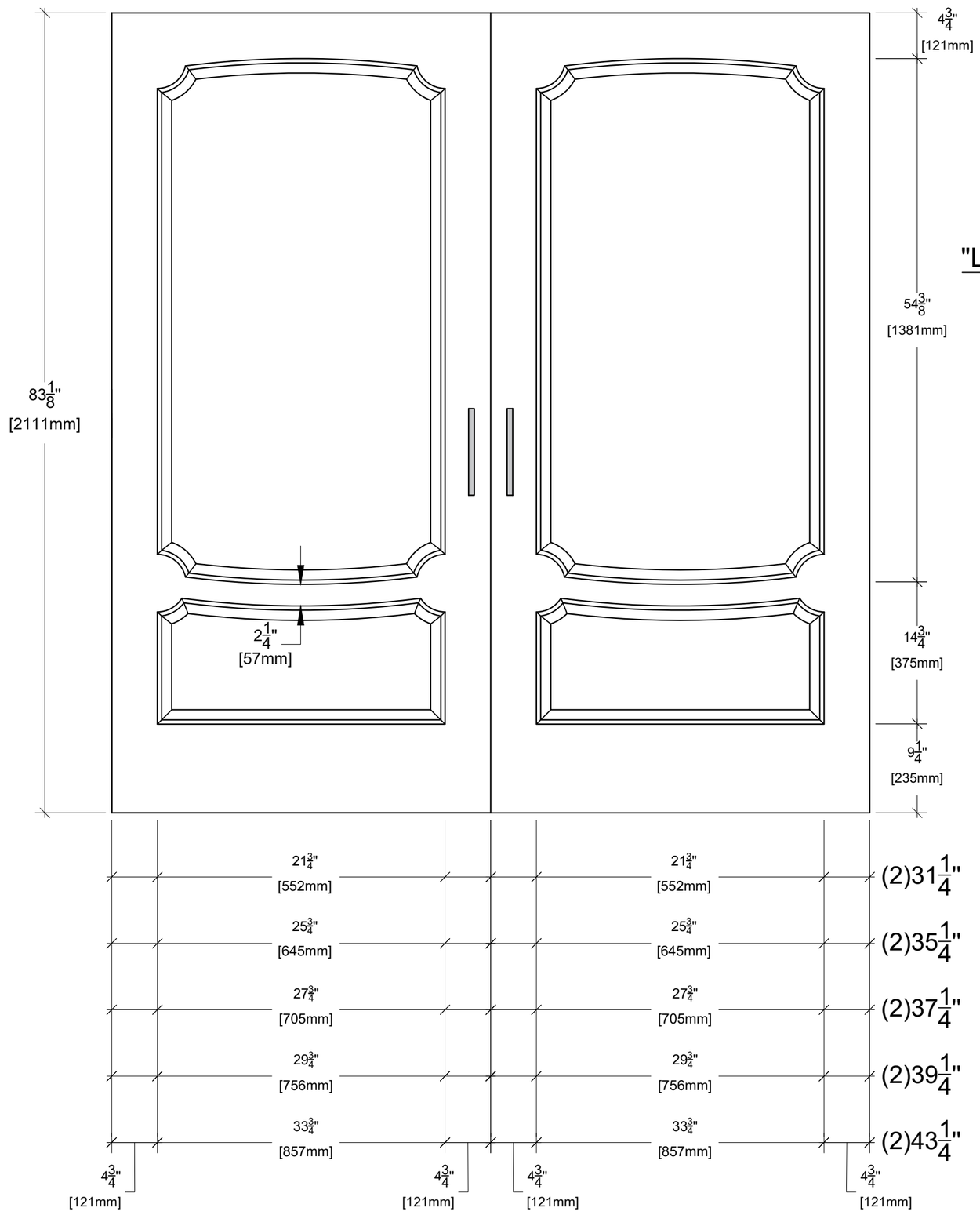

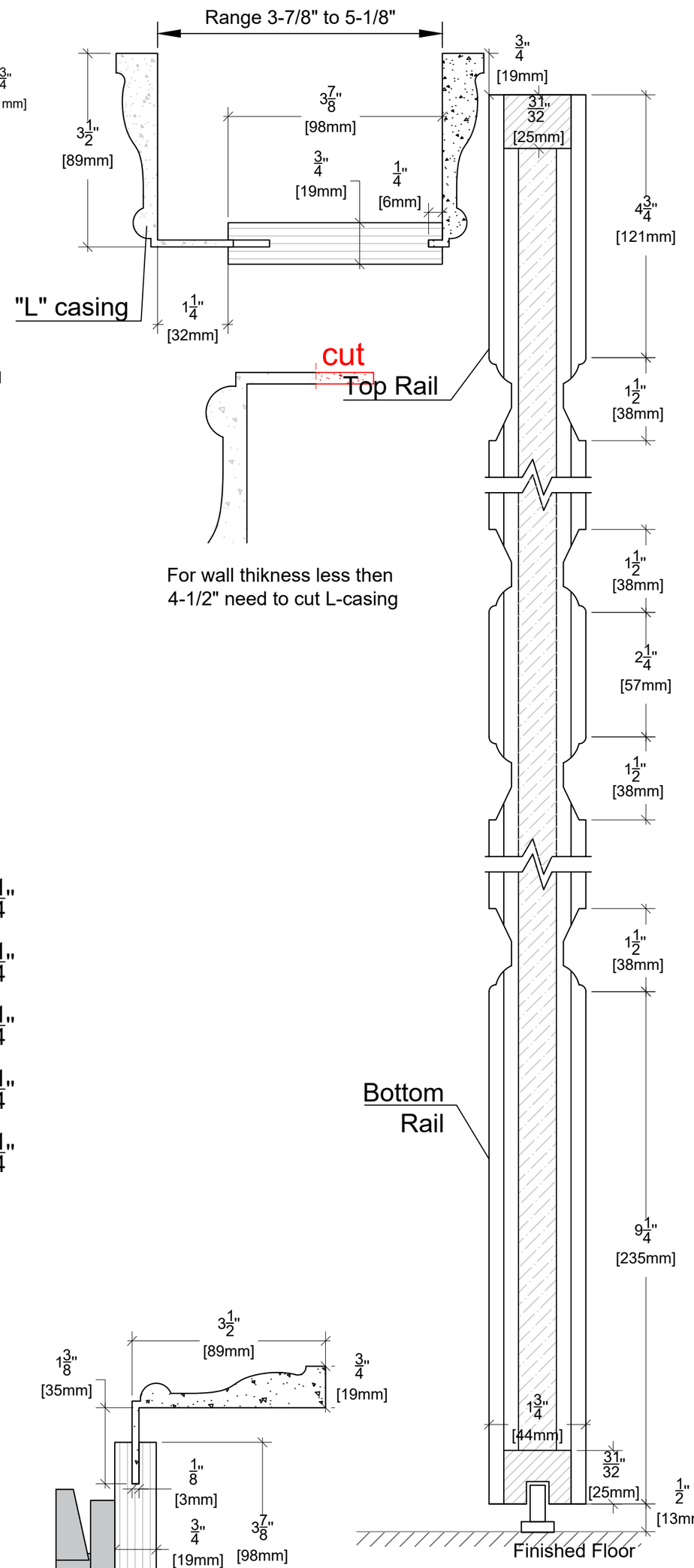

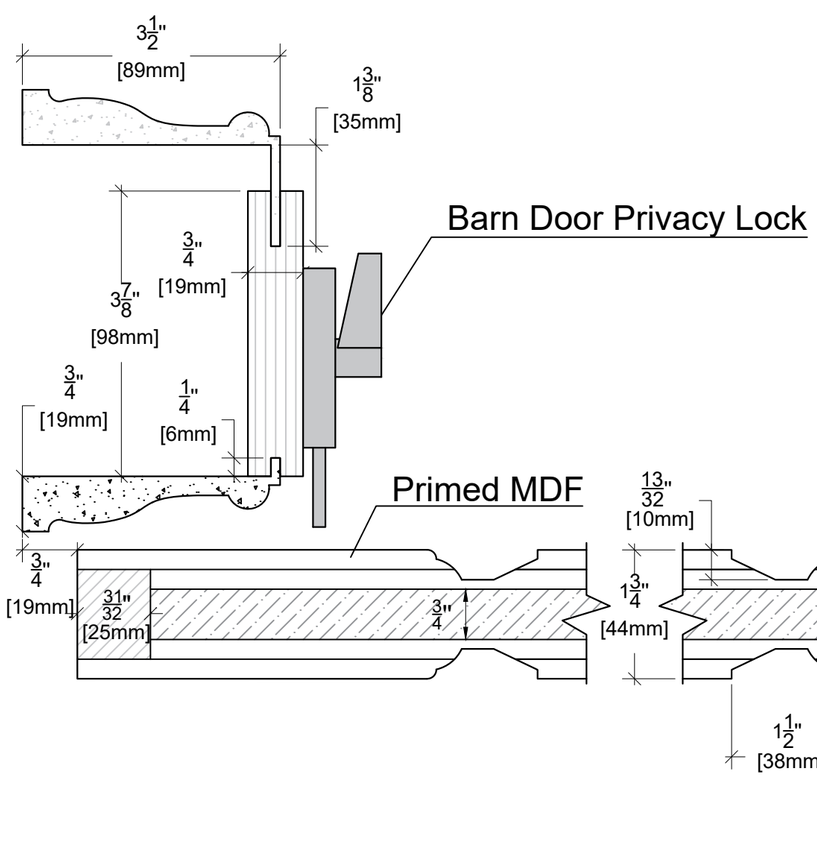

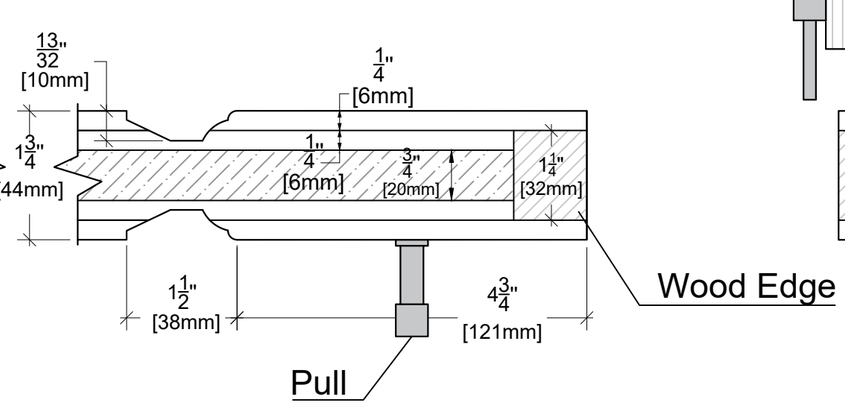

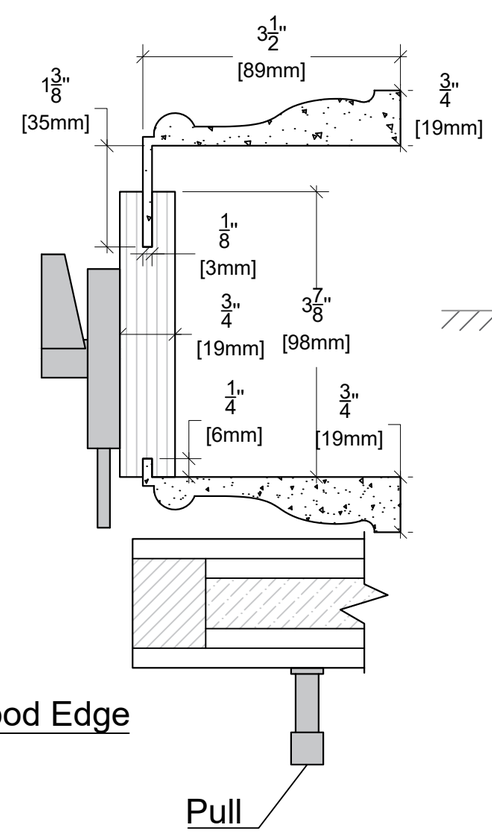

ALMES DOORS

Model: Manhattan Chic - Lenox

Configuration: D Barn 82"