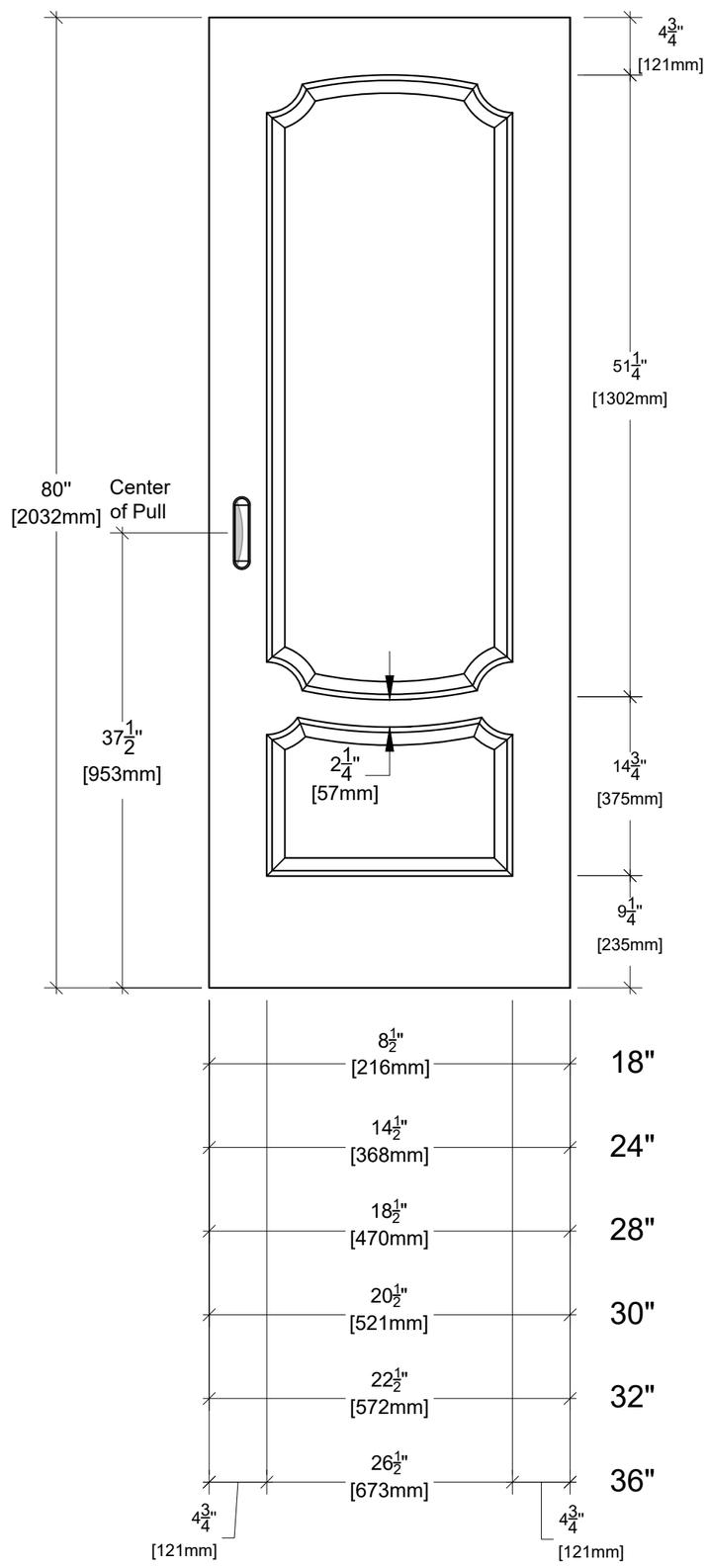

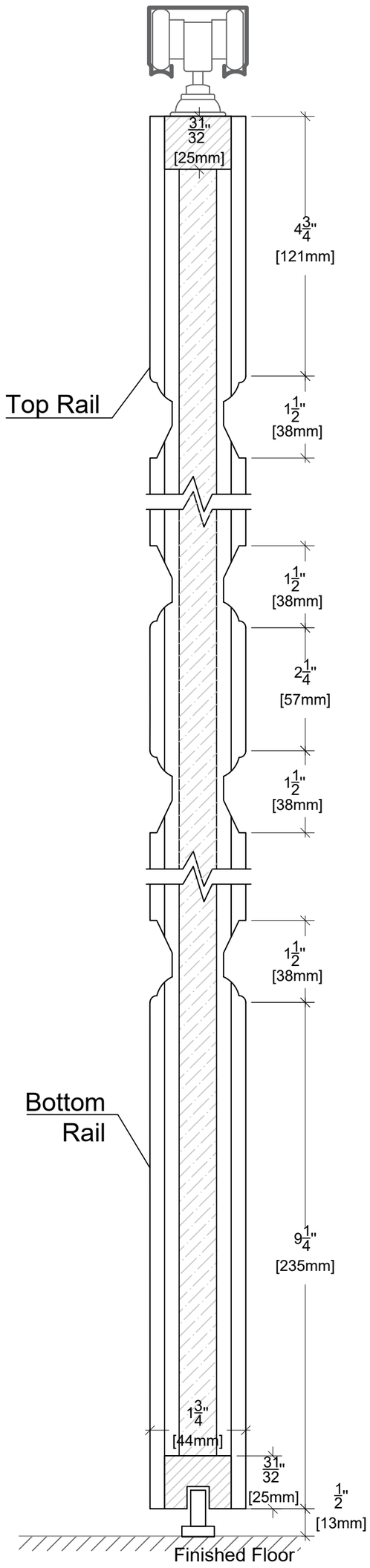

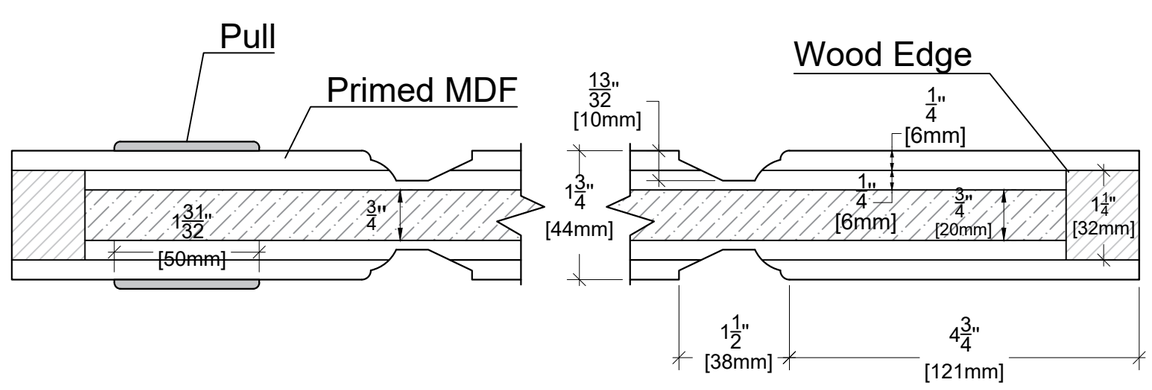

ALMES DOORS

Model: Manhattan Chic - Lenox

Configuration: Pocket 80"