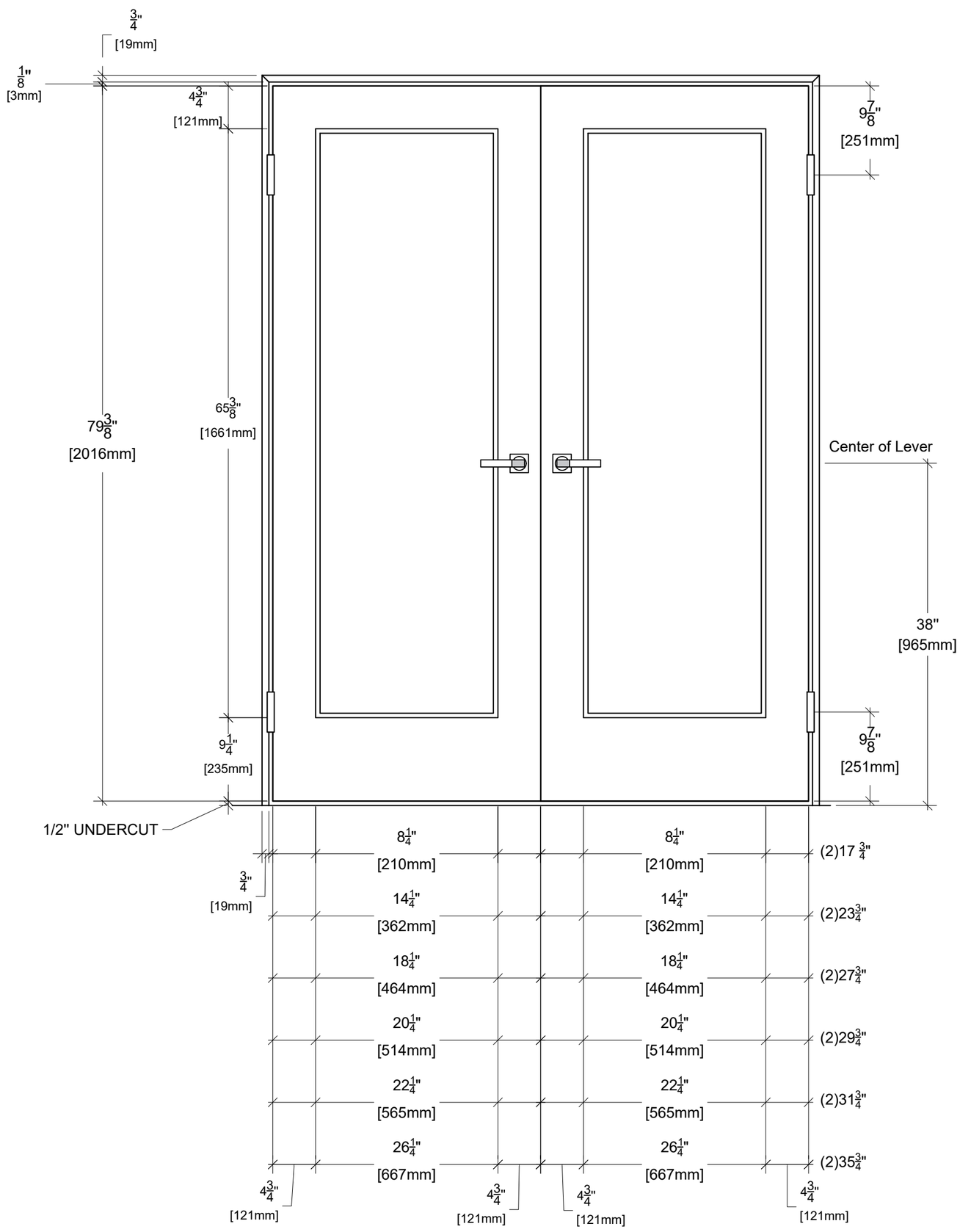

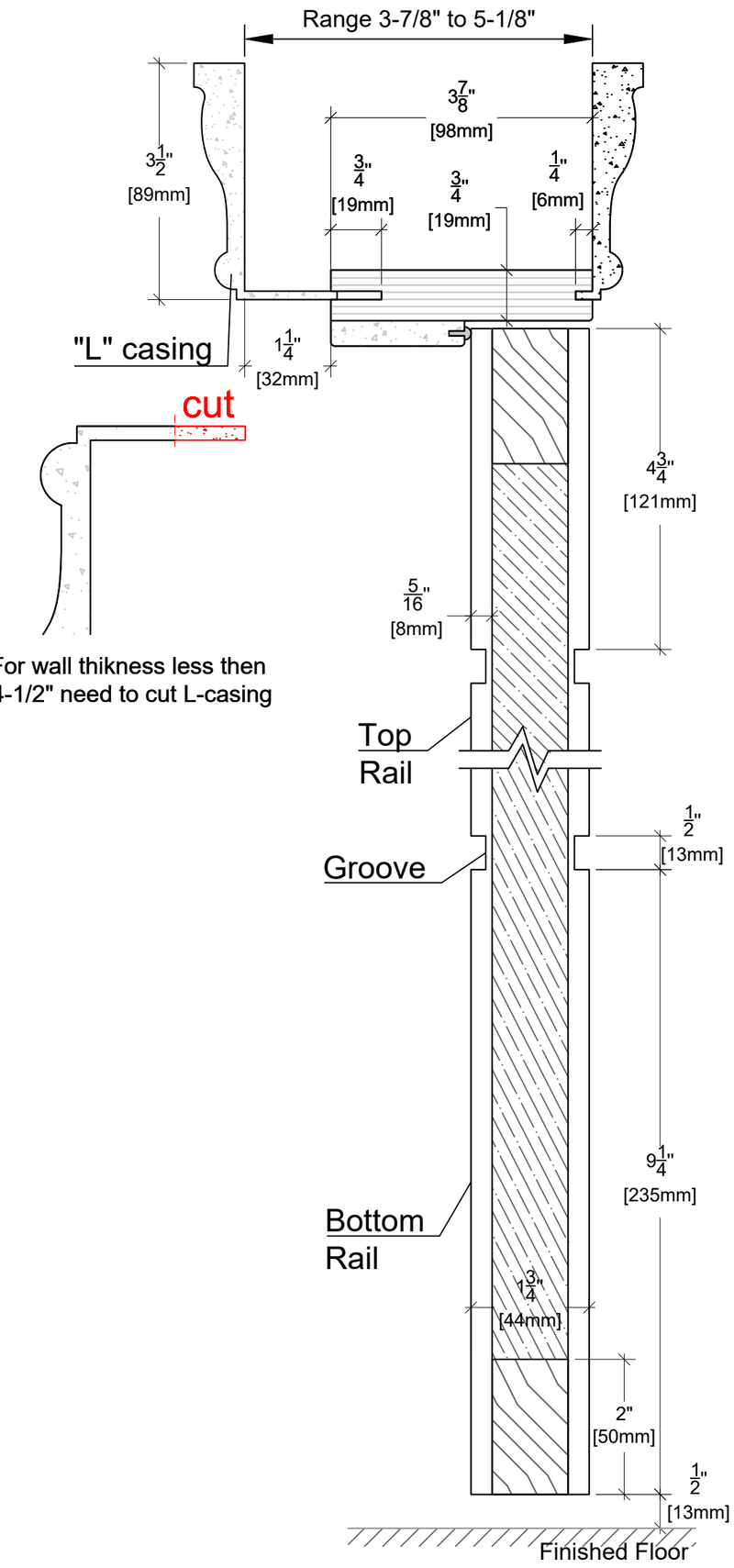

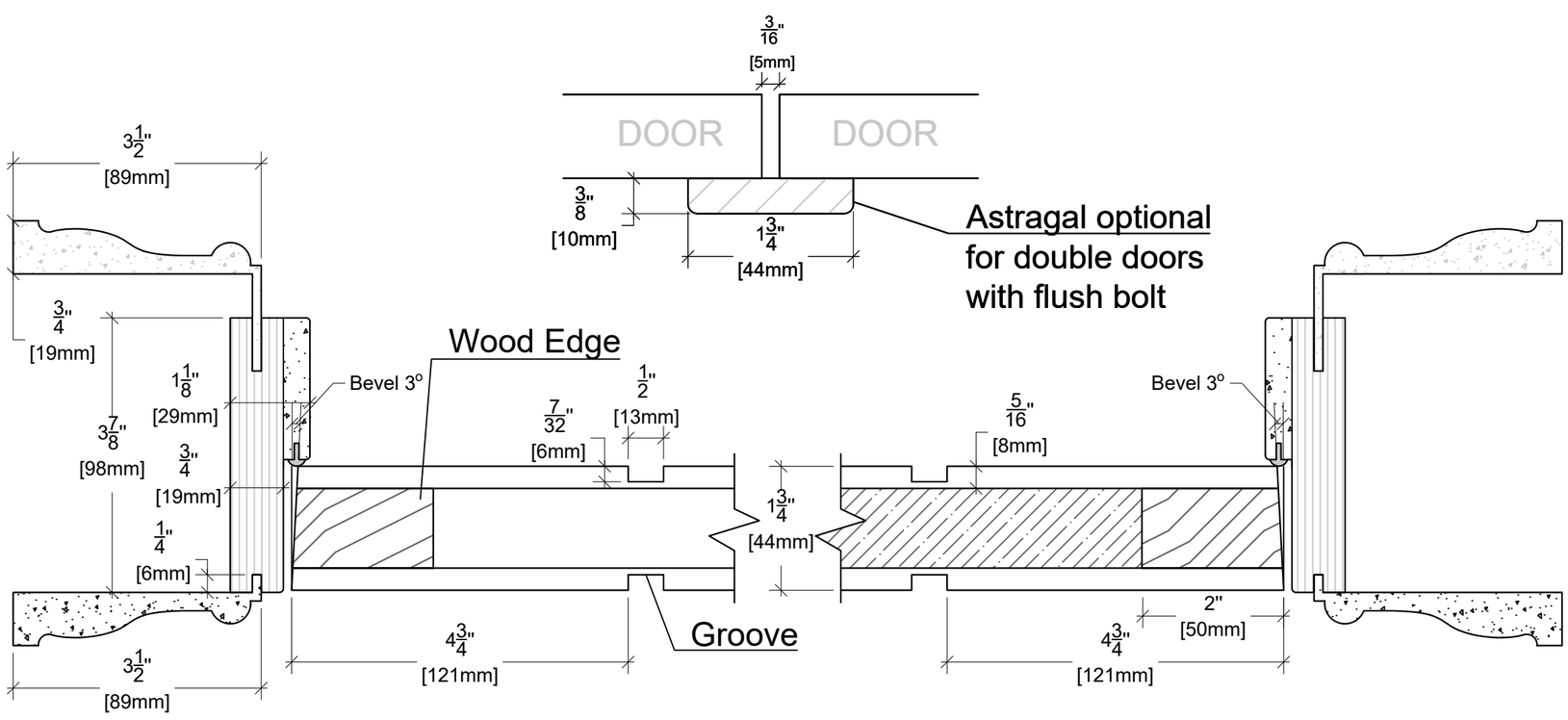

ALMES DOORS

Model: Manhattan Chic - Trinity Uno

Configuration: D Swing 80"