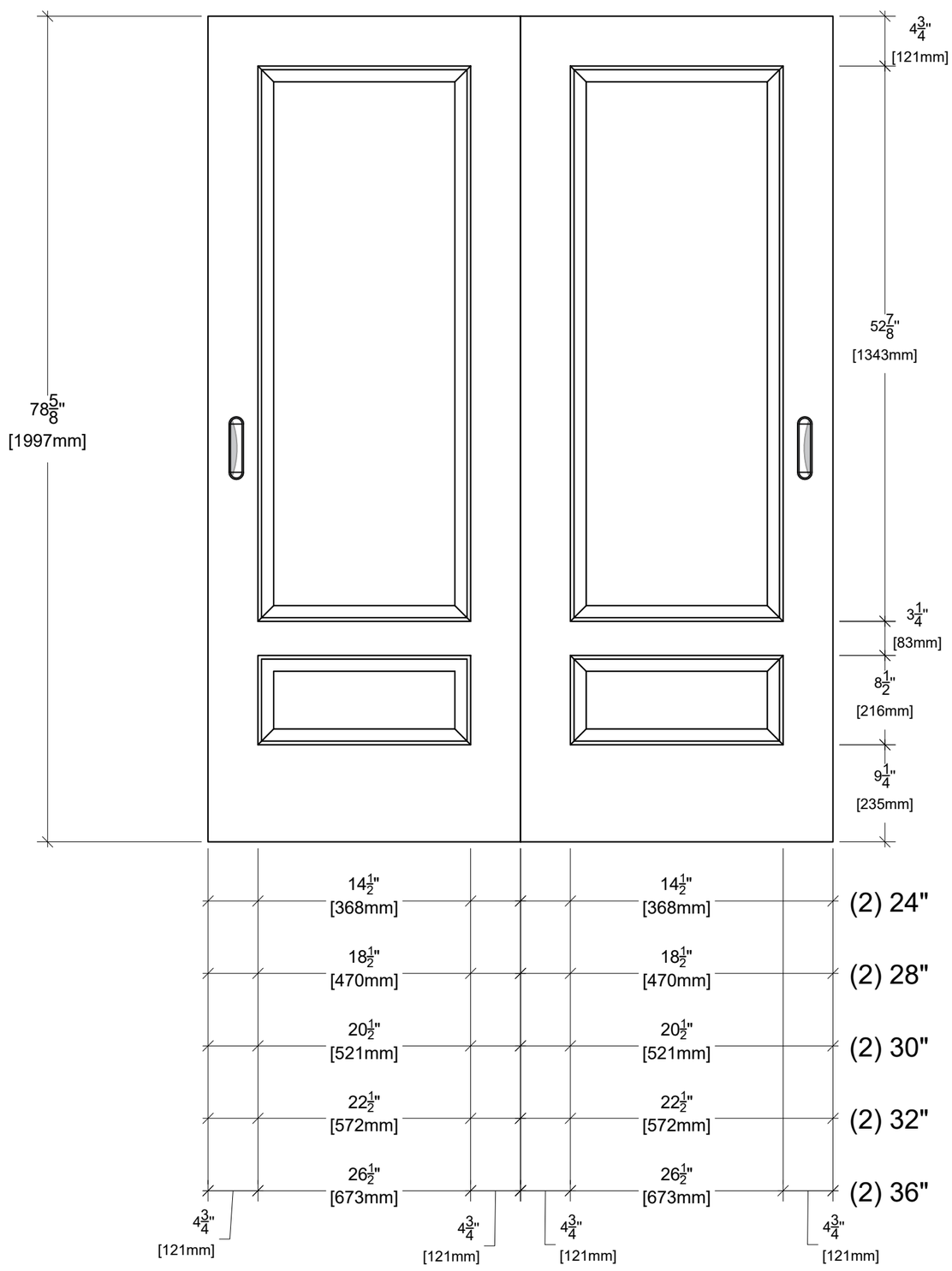

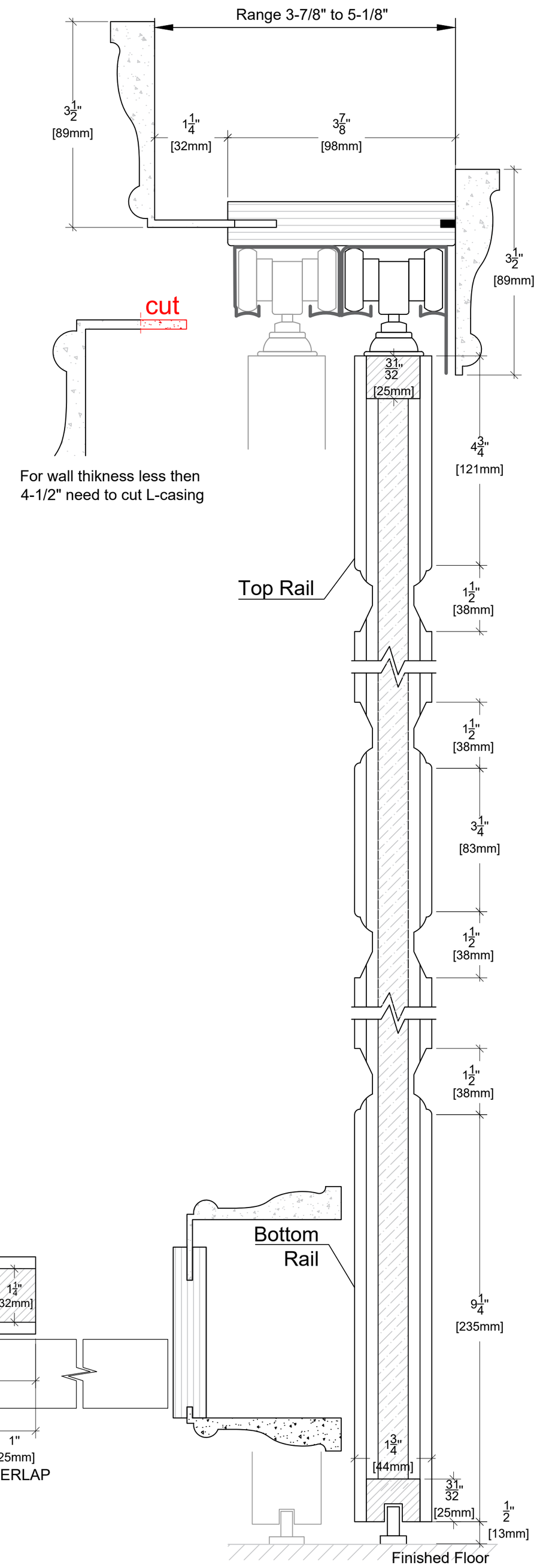

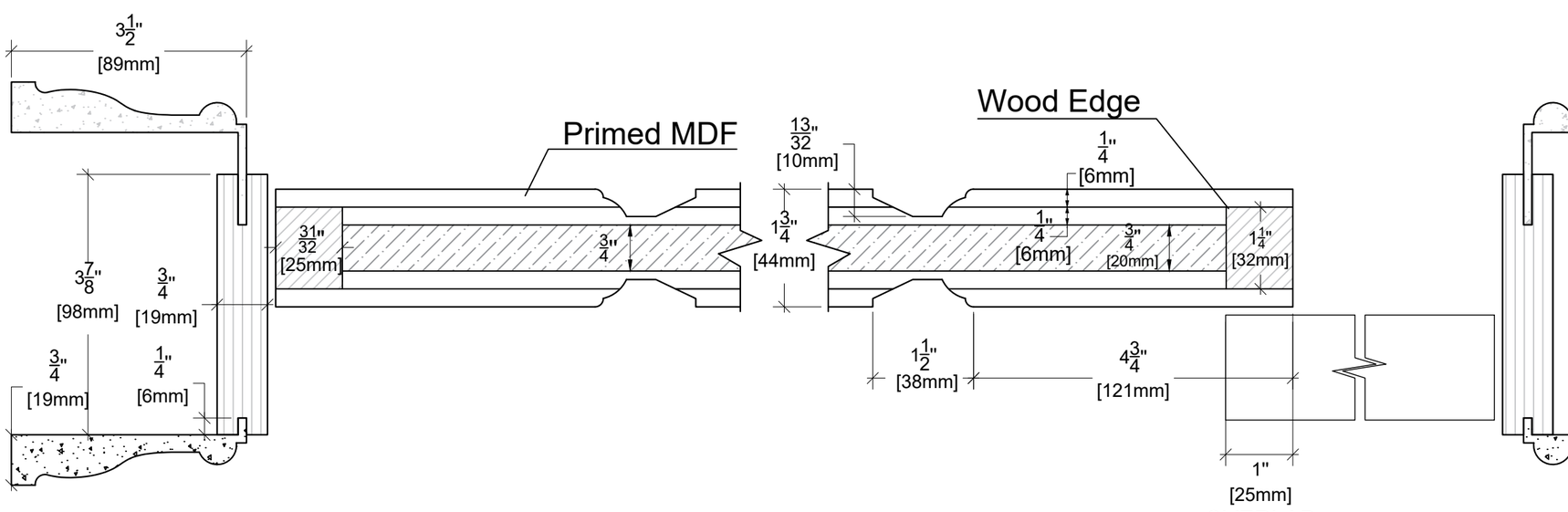

Model: Manhattan Chic - Gramercy

Configuration: Bypass 81"