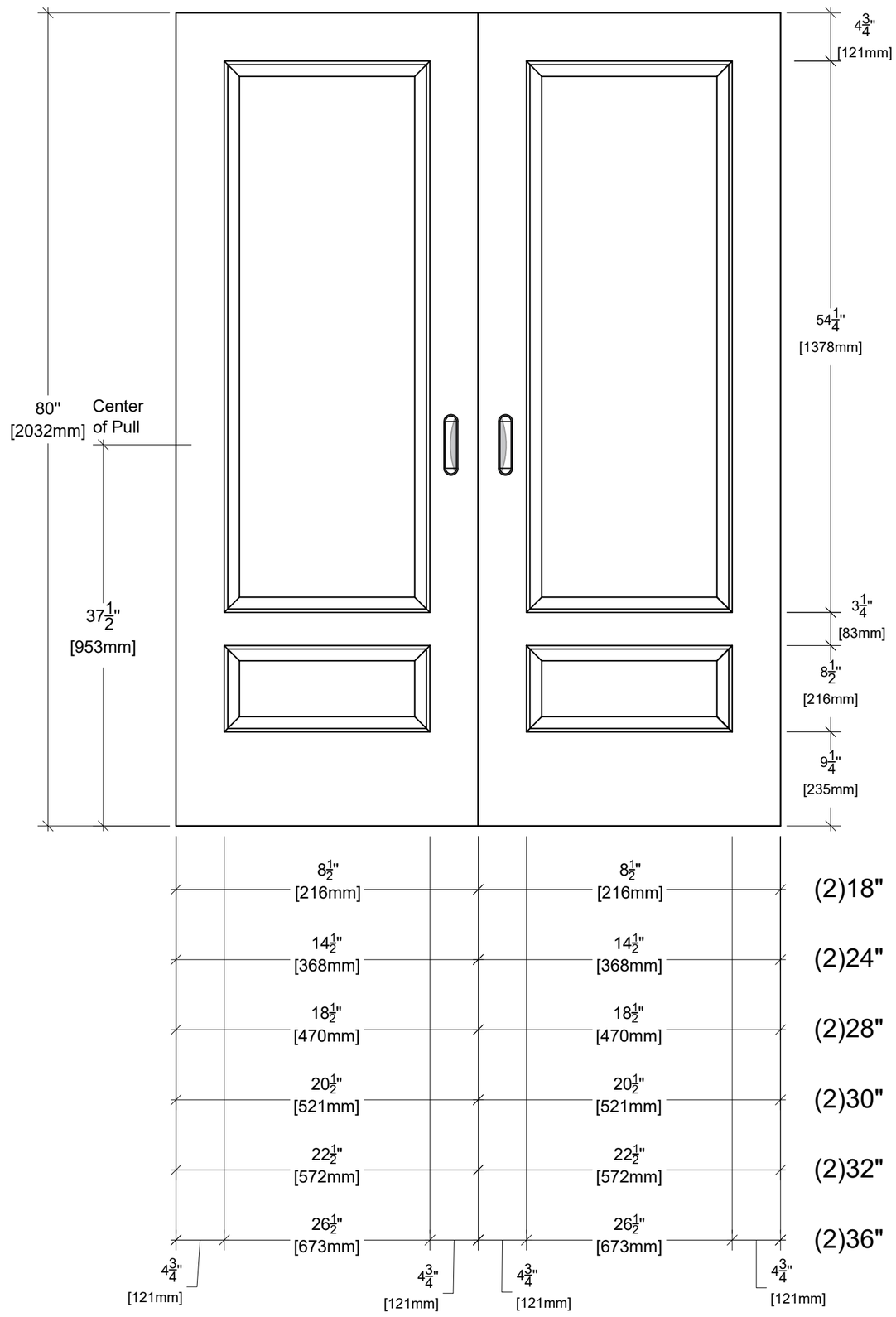

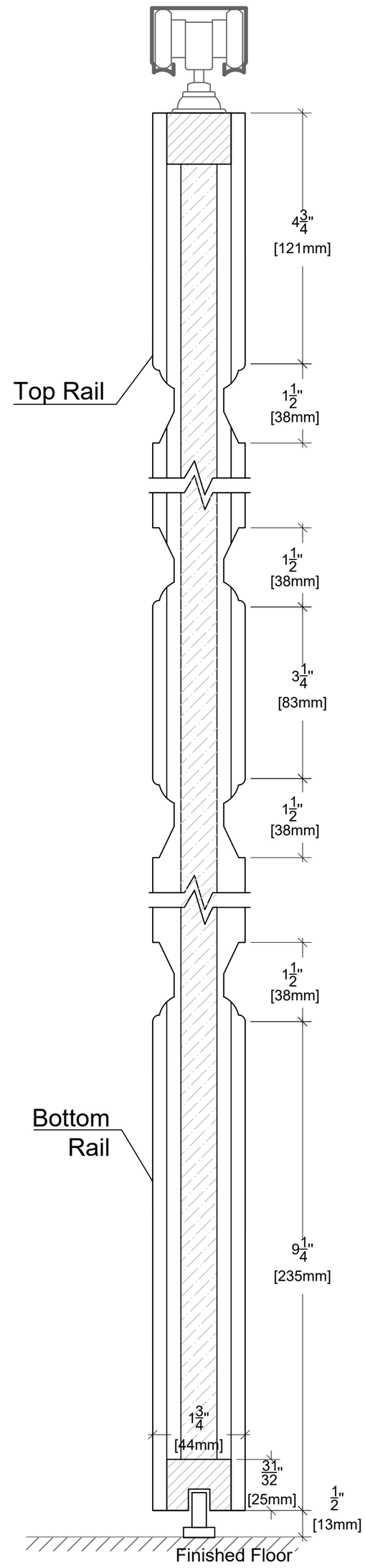

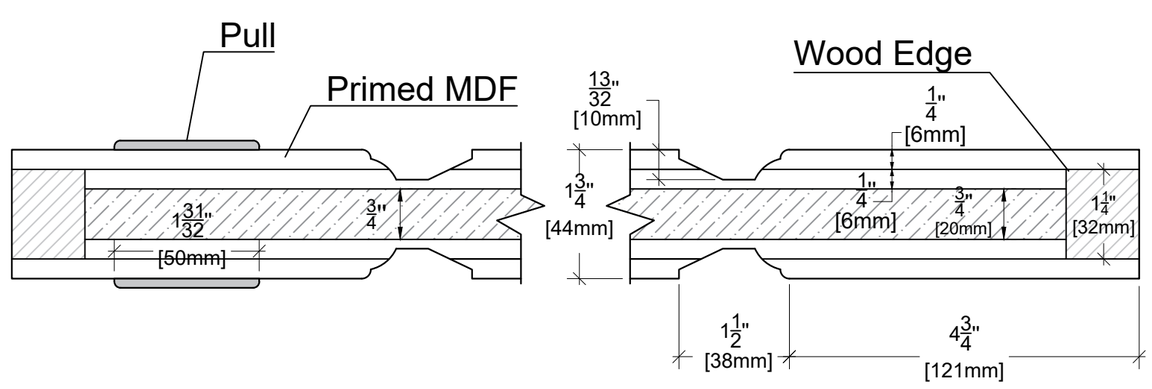

ALMES DOORS

Model: Manhattan Chic - Gramercy

Configuration: D Pocket 80"