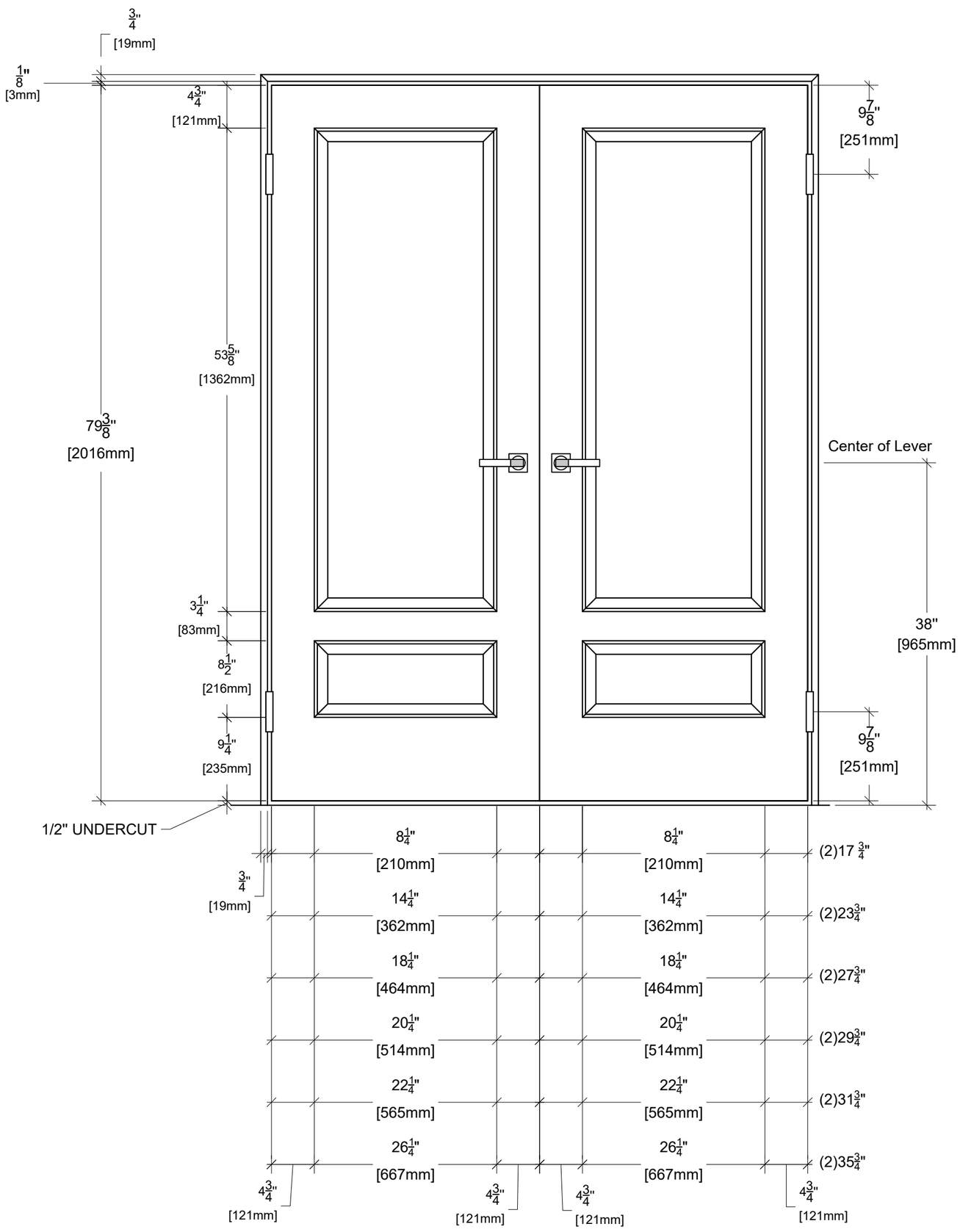

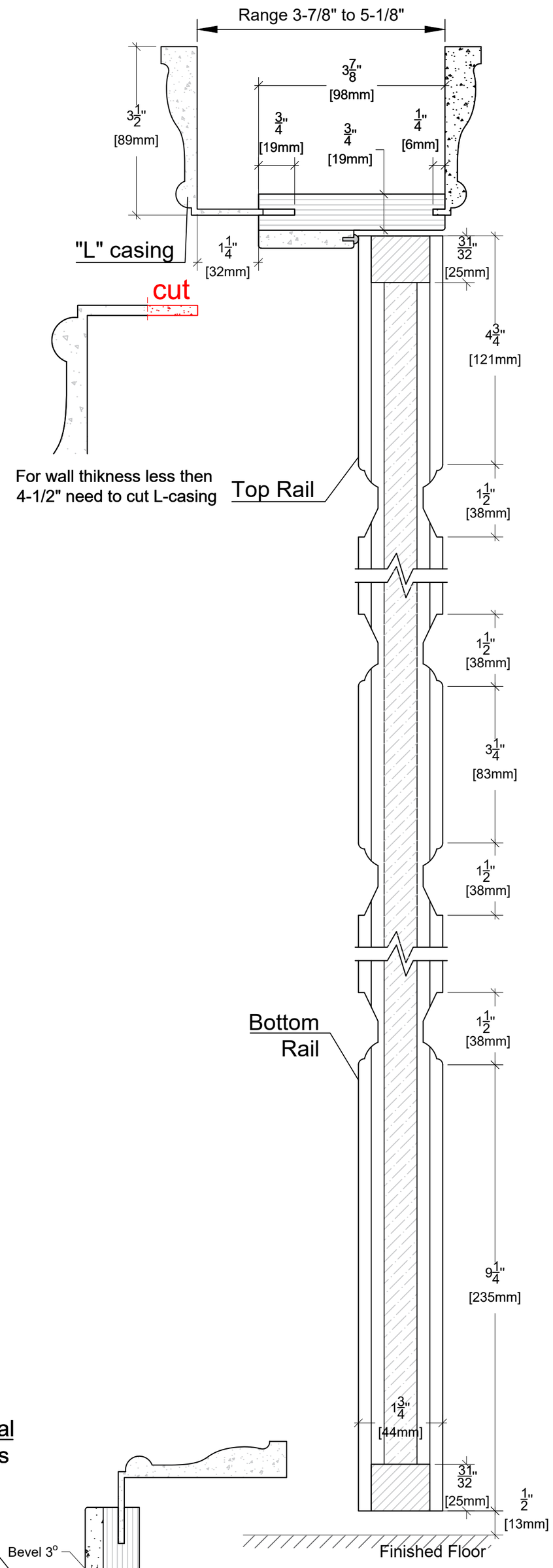

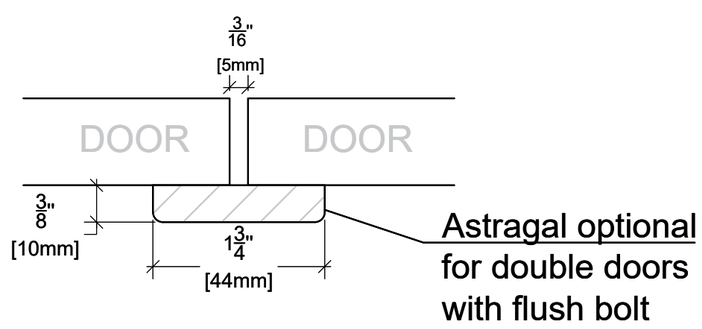

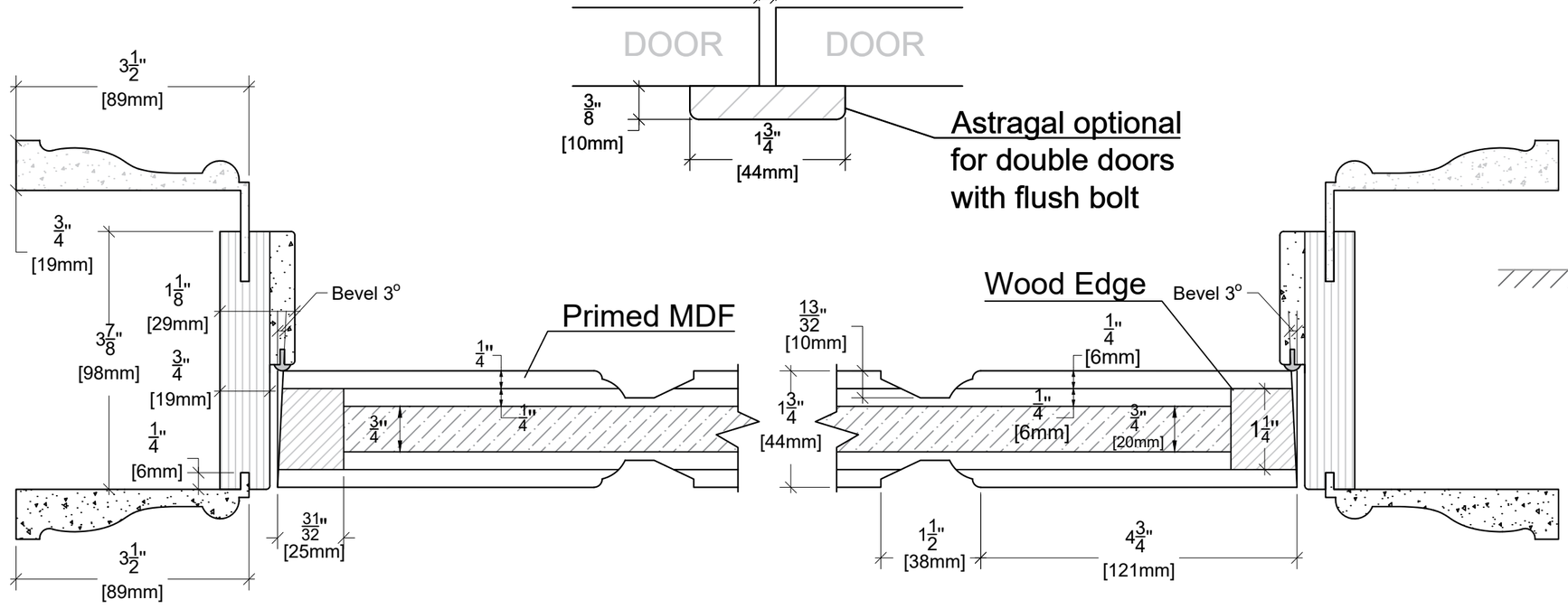

ALMES DOORS

Model: Manhattan Chic - Gramercy

Configuration: D Swing 80"