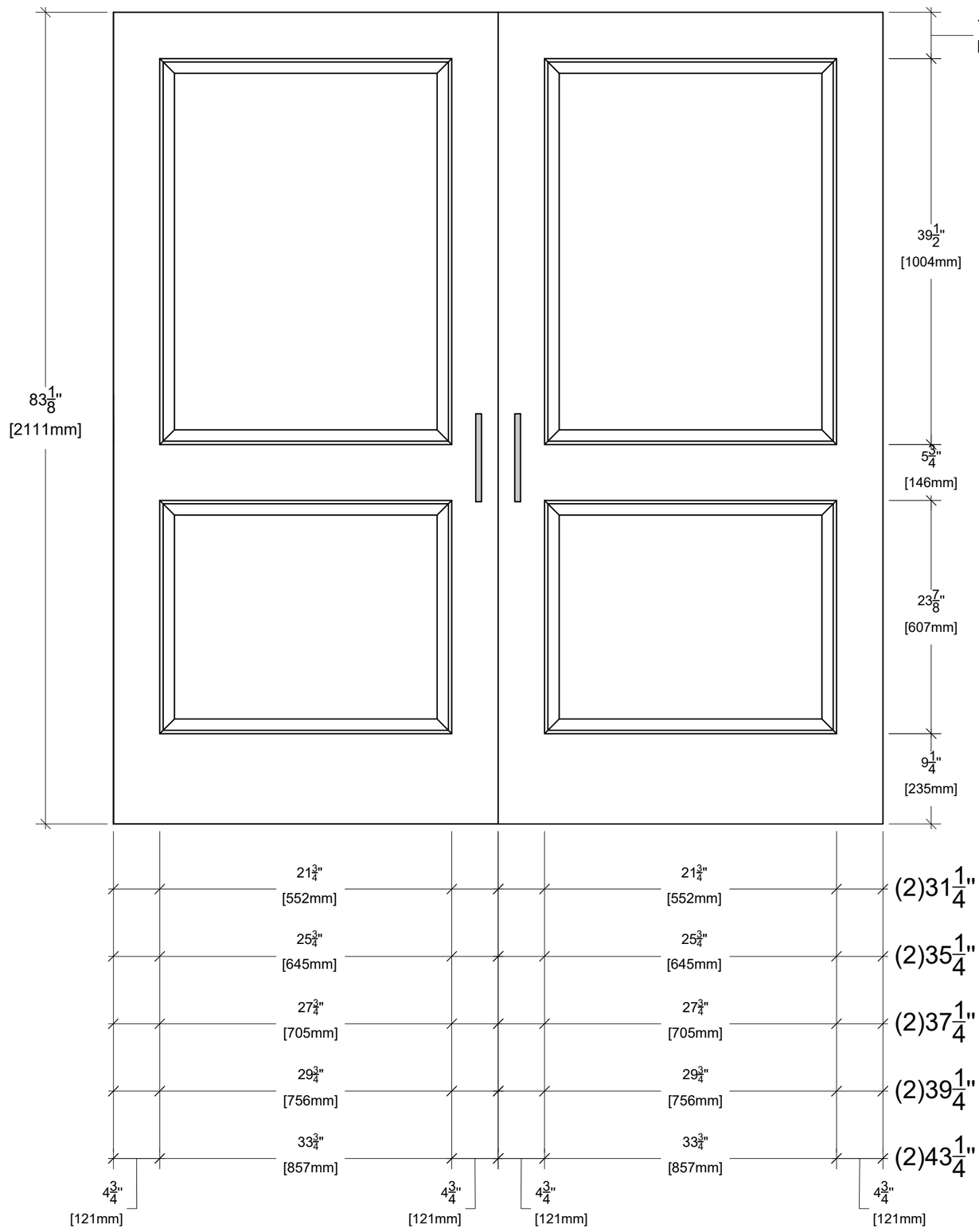

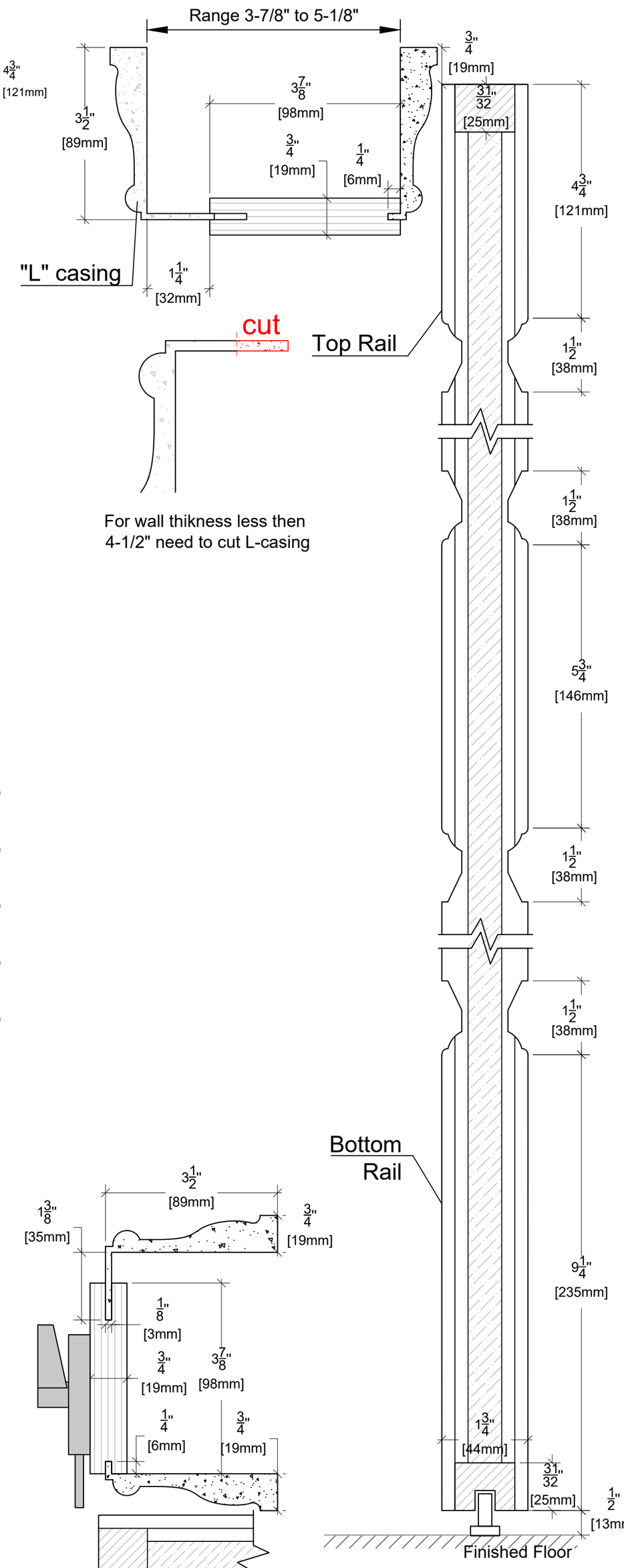

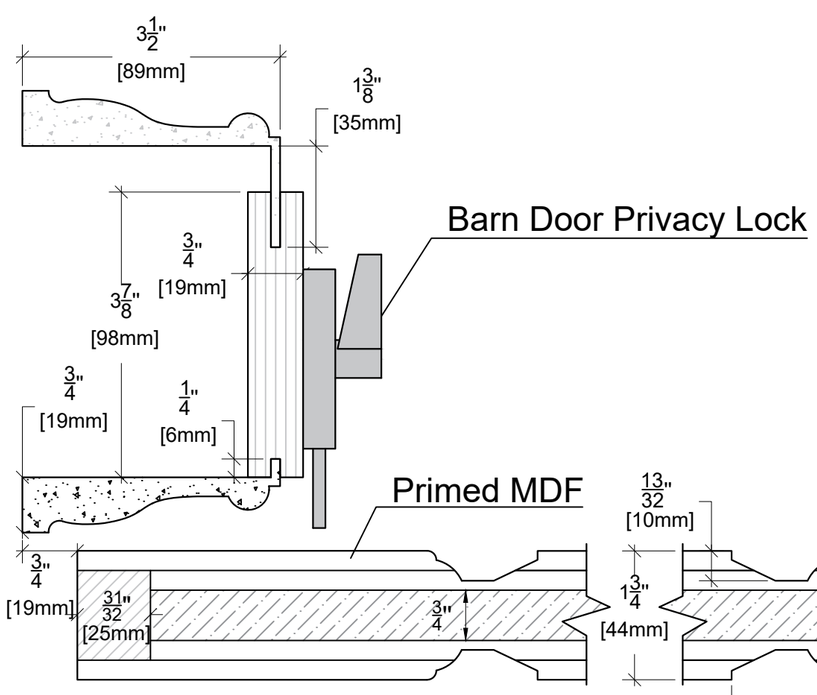

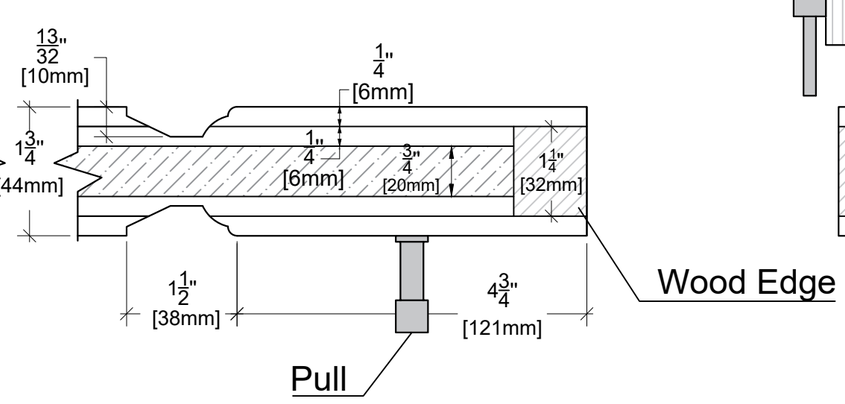

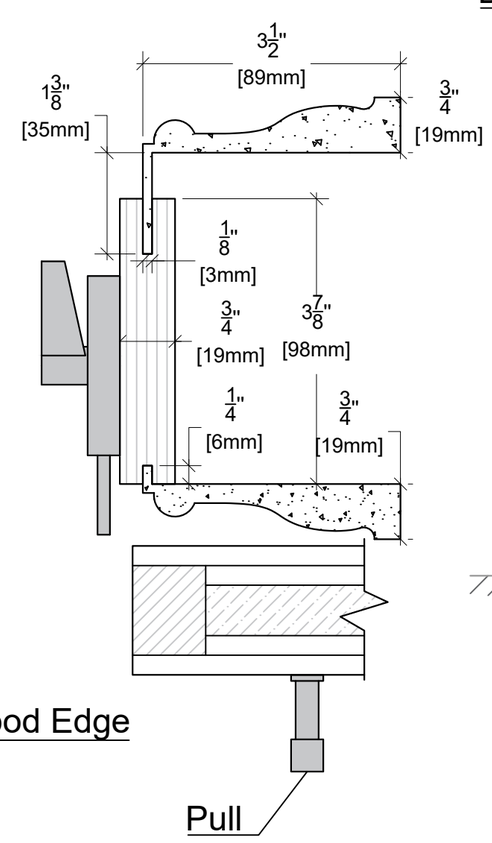

ALMES DOORS

Model: Manhattan Chic - Greenwich

Configuration: D Barn 82"