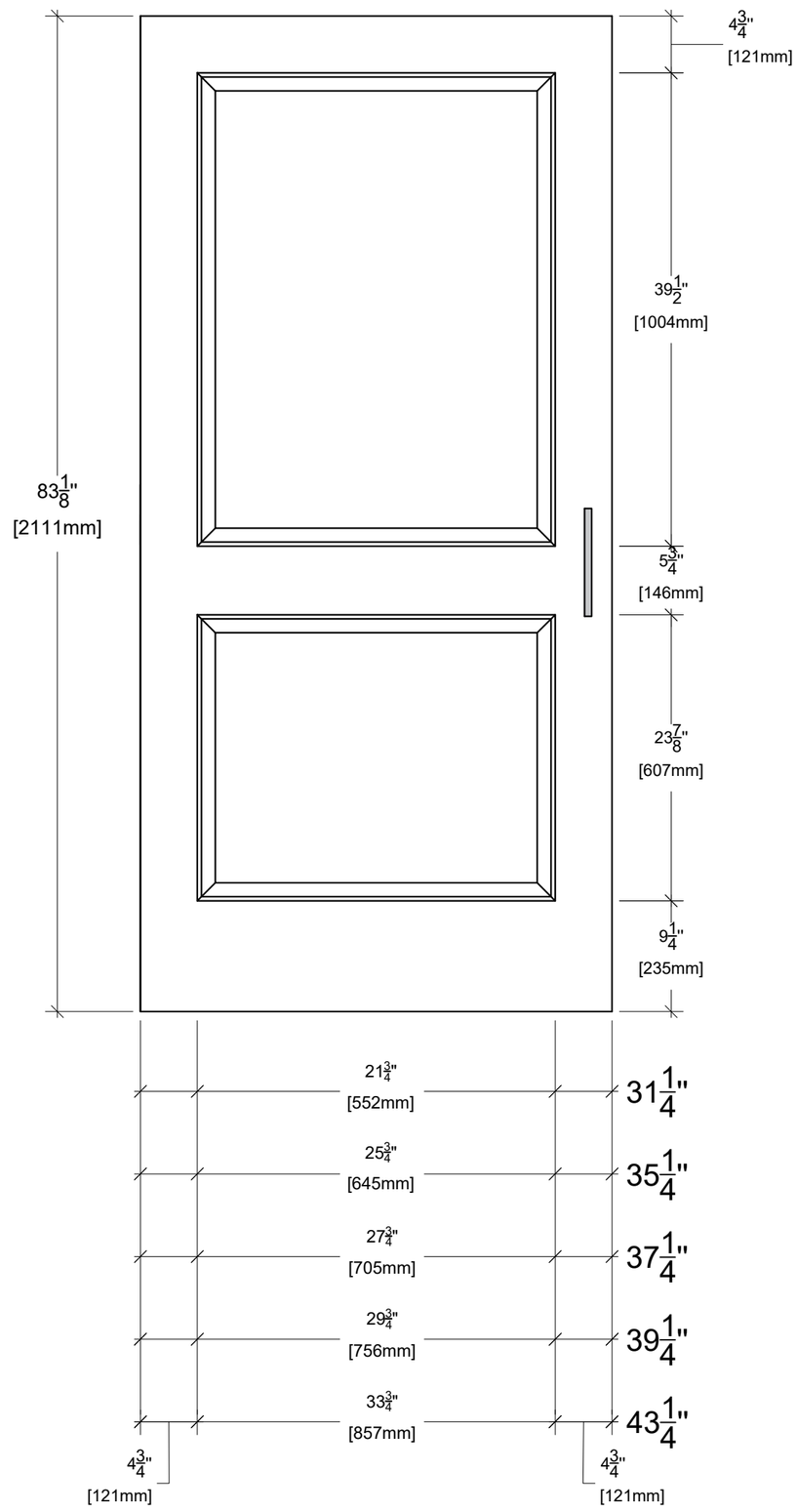


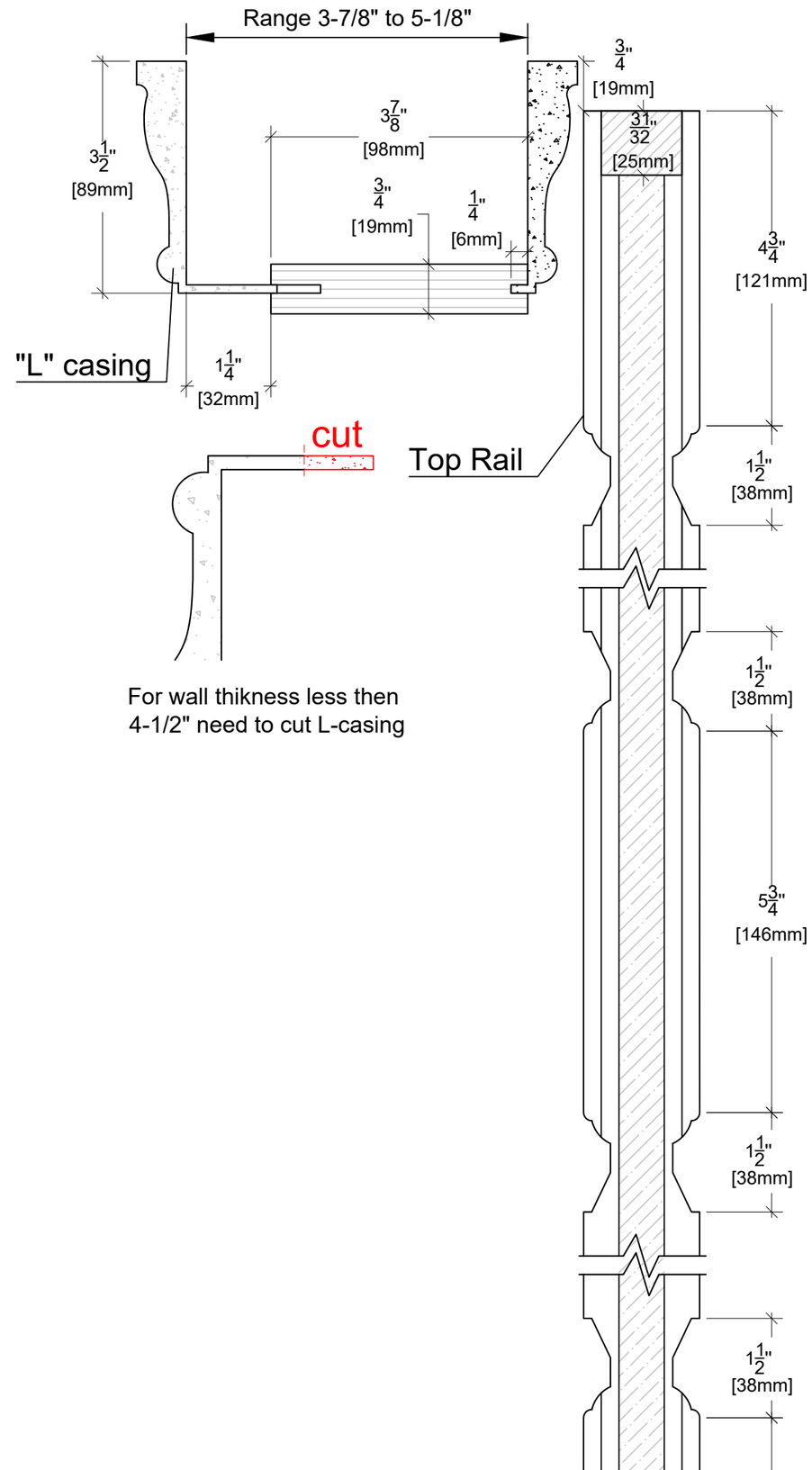


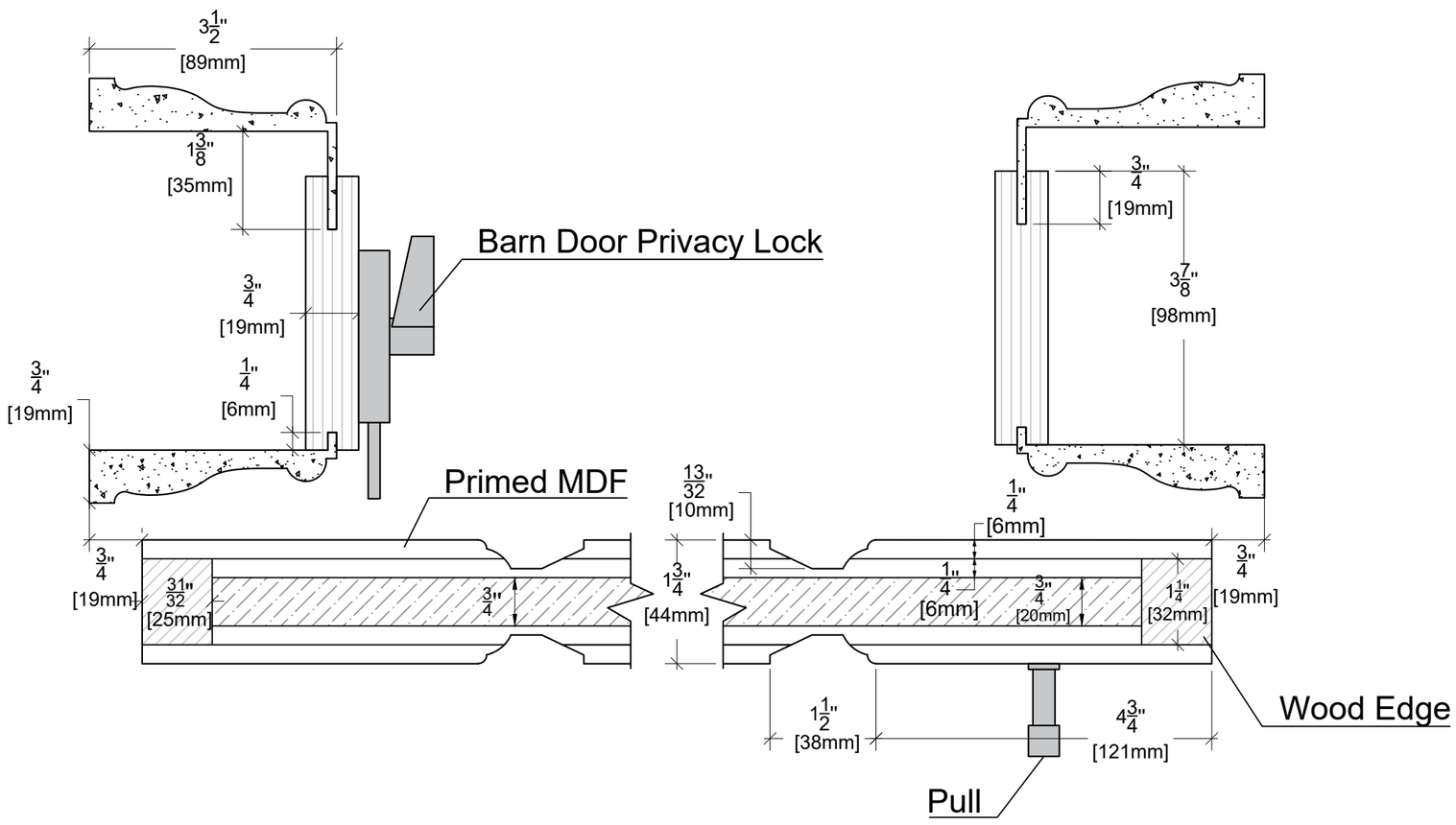





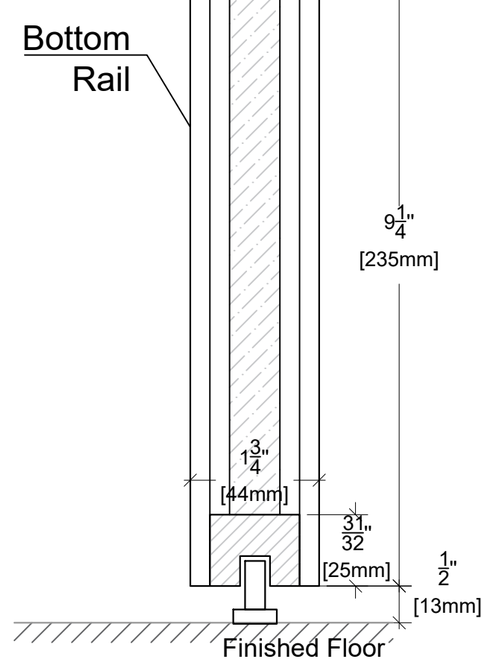


ALMES DOORS

Model: Manhattan Chic - Greenwich

Configuration: Barn 82"