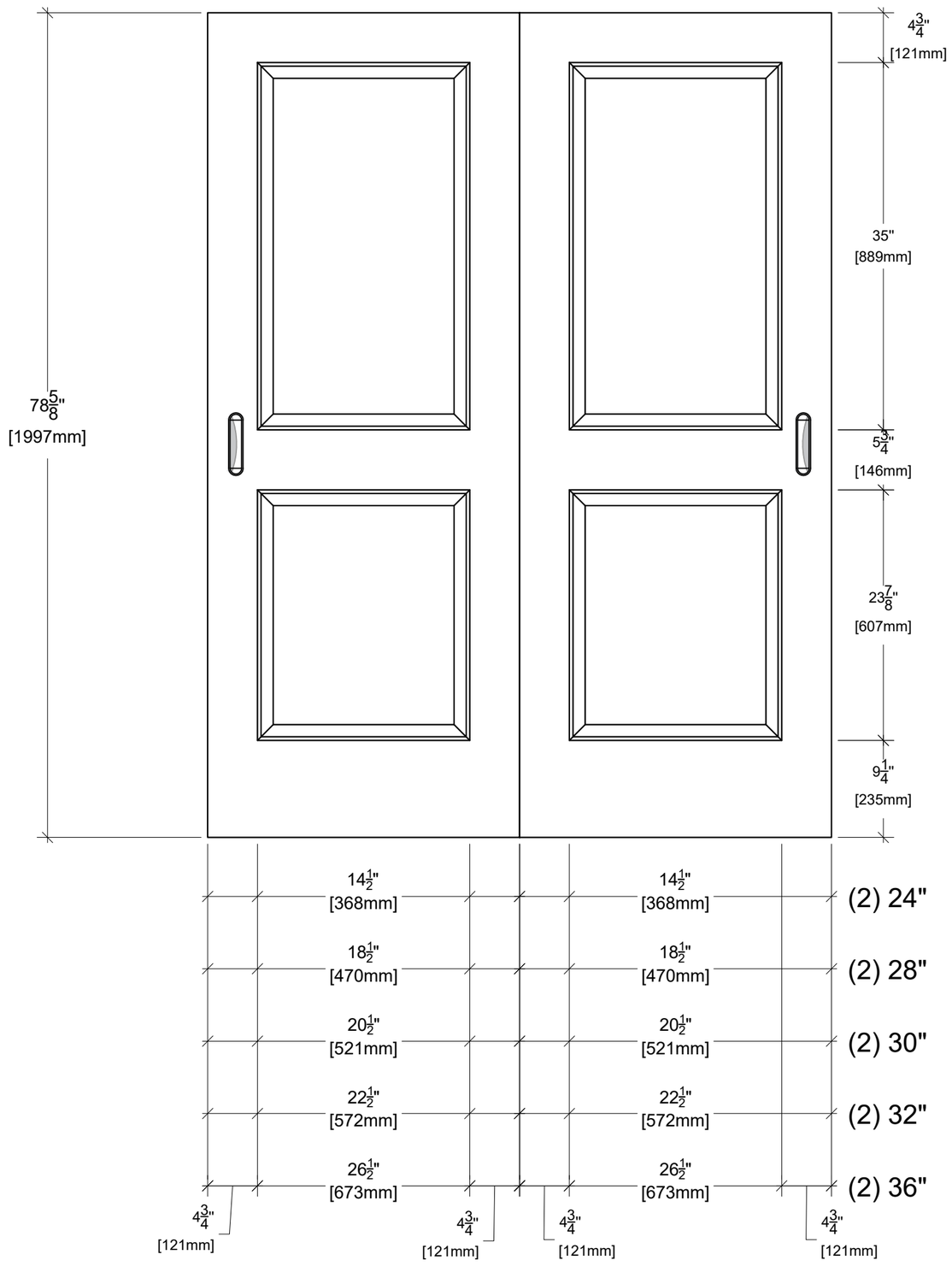

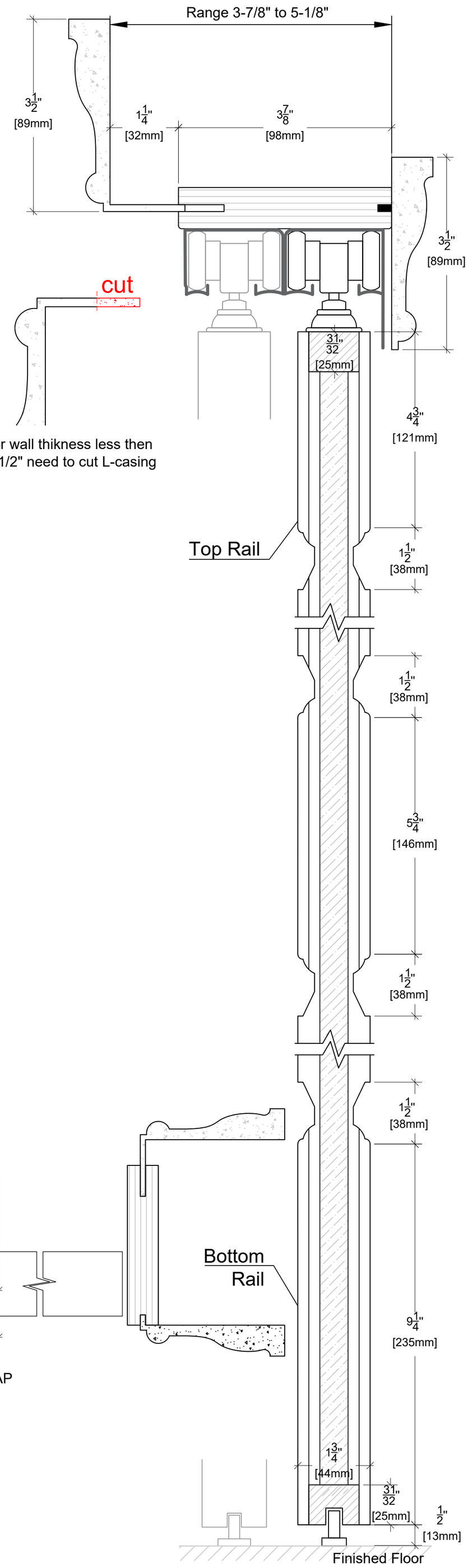

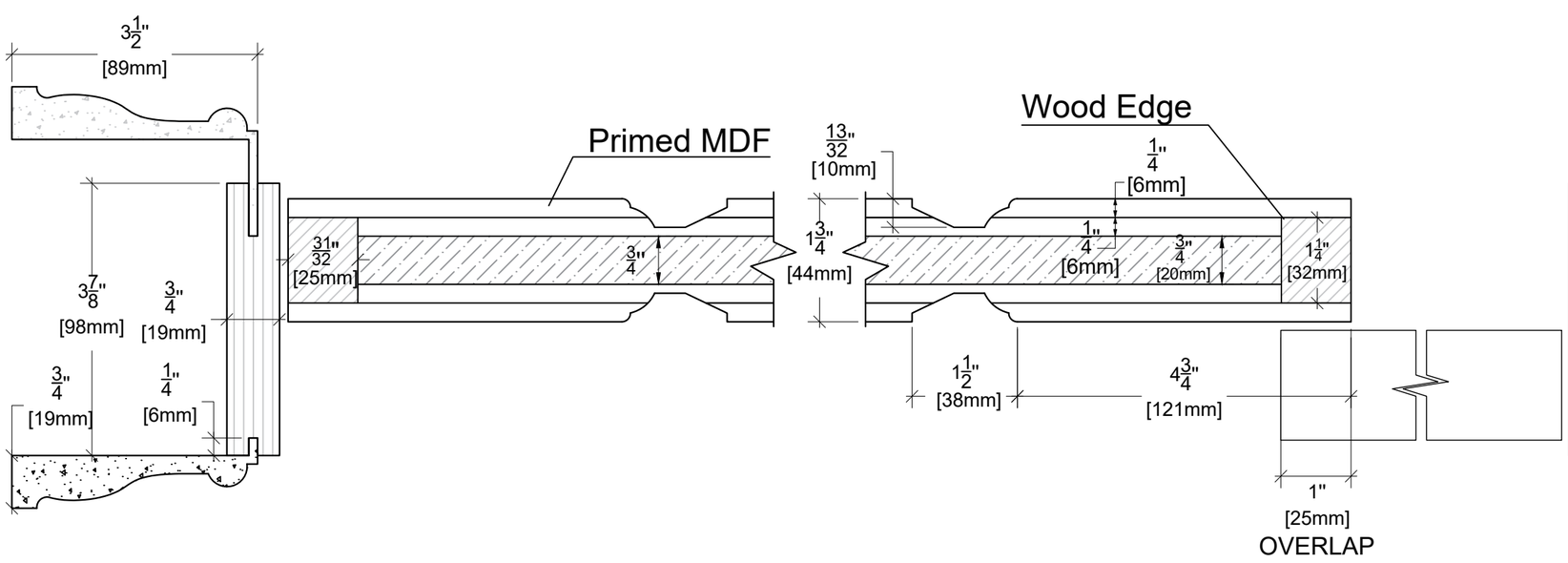

ALMES DOORS

Model: Manhattan Chic - Greenwich

Configuration: Bypass 81"