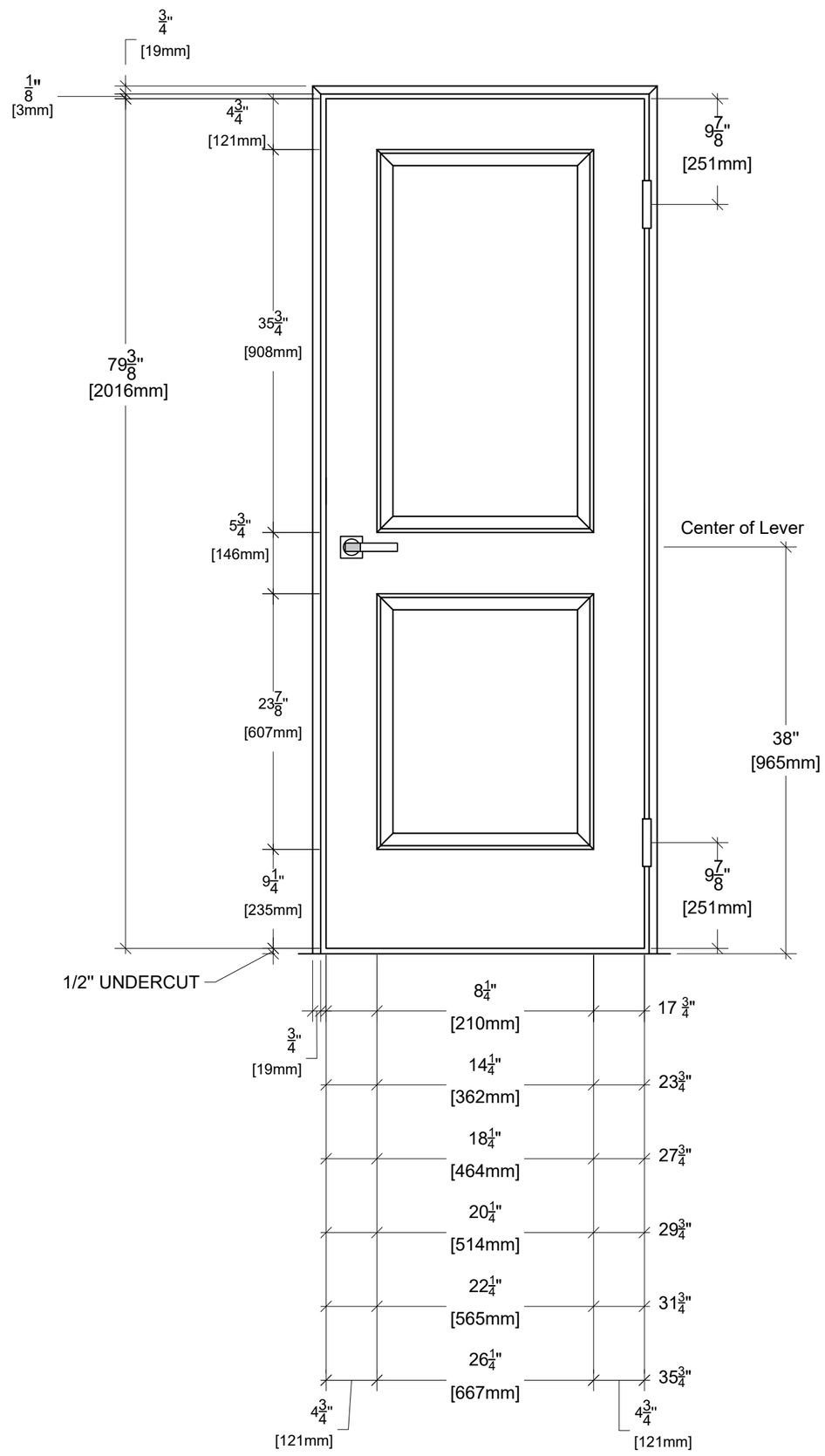

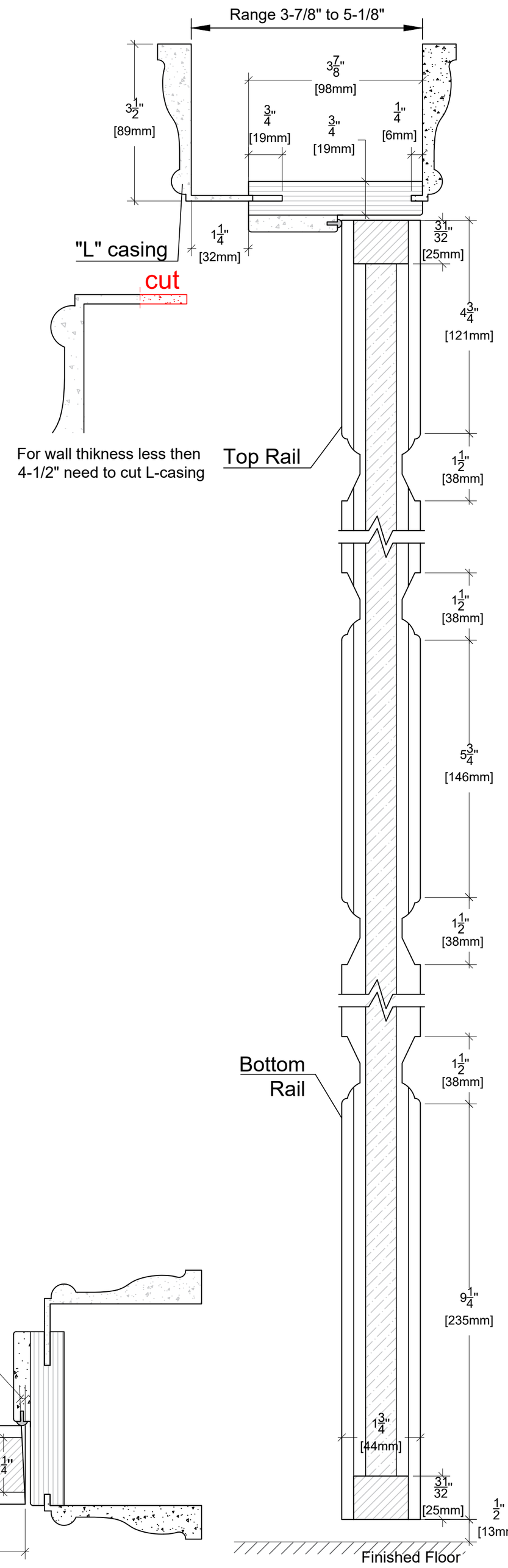

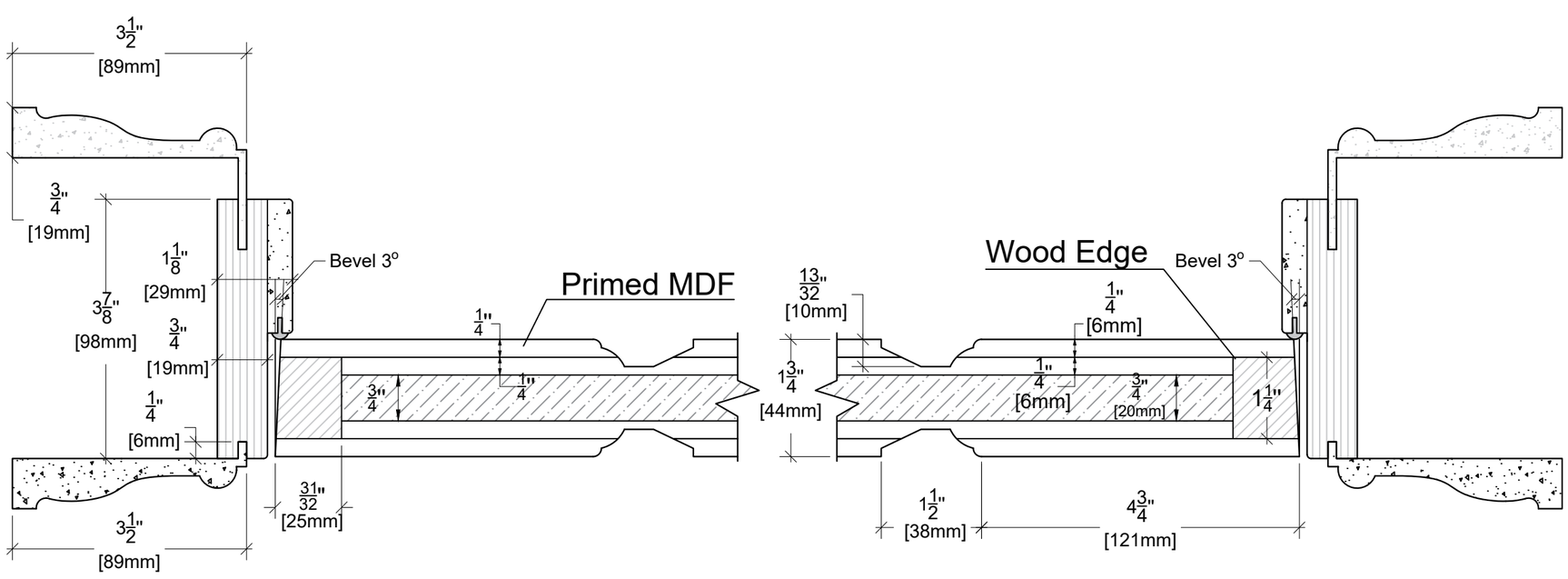

ALMES DOORS

Model: Manhattan Chic - Greenwich

Configuration: Swing 80"