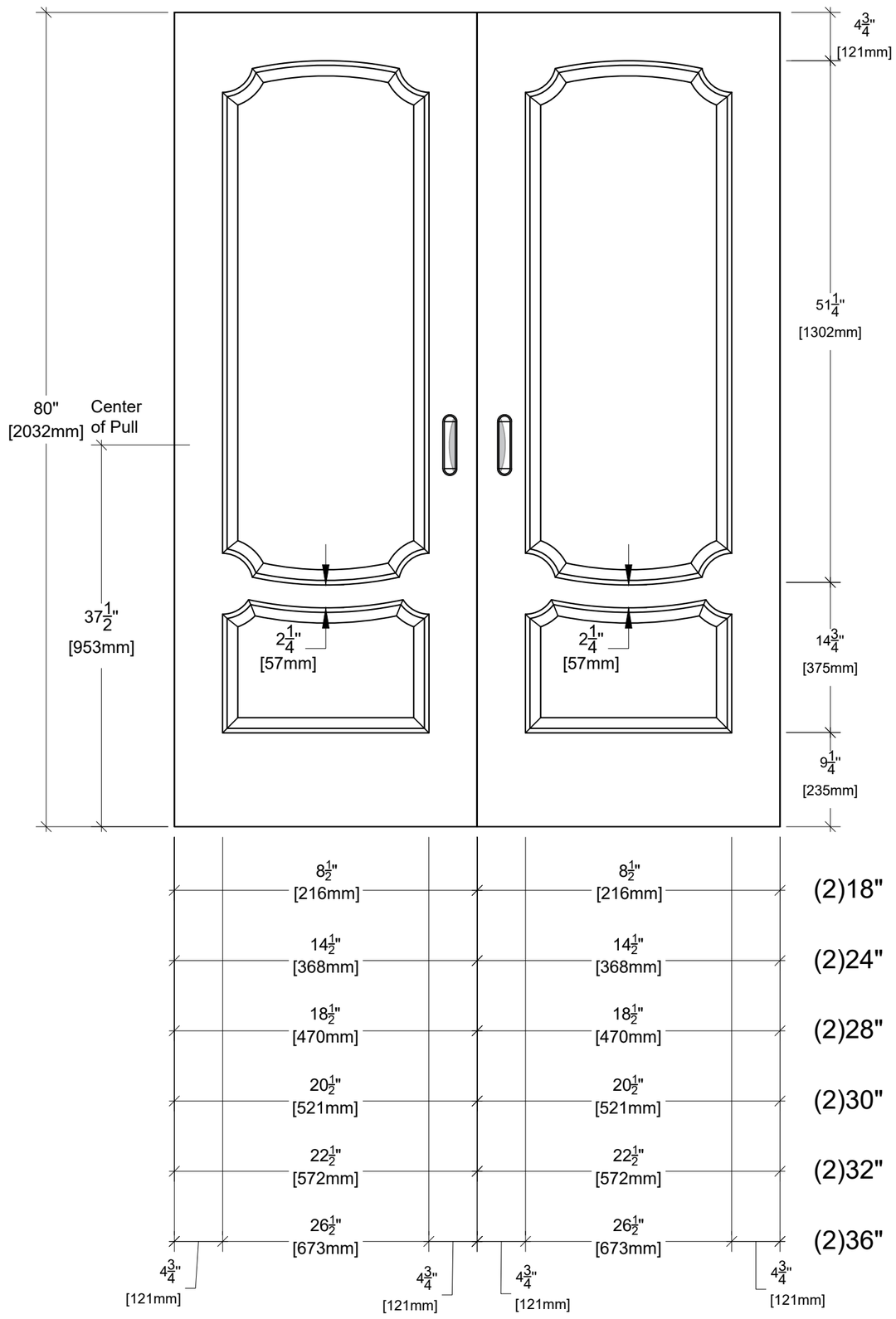

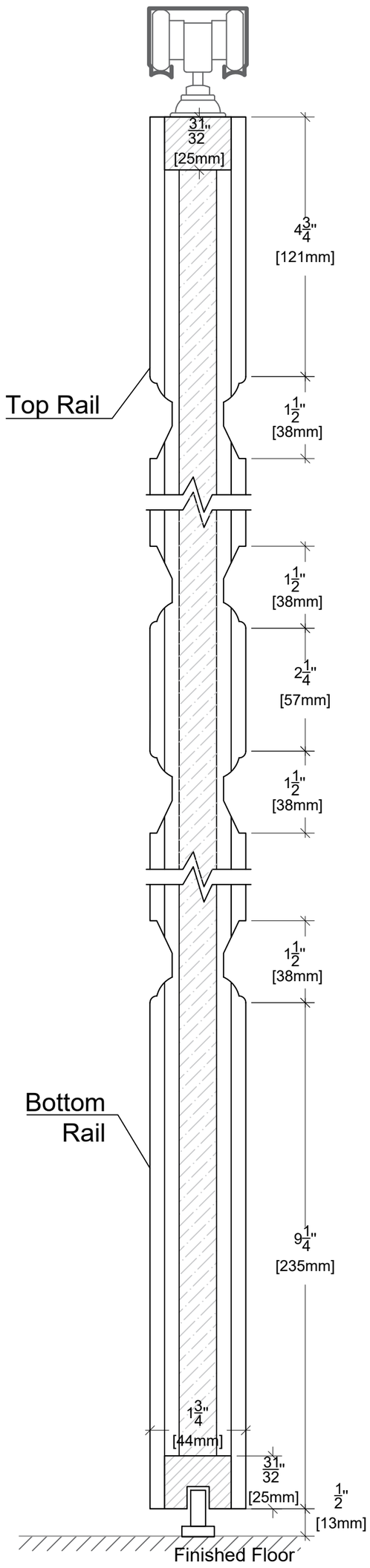

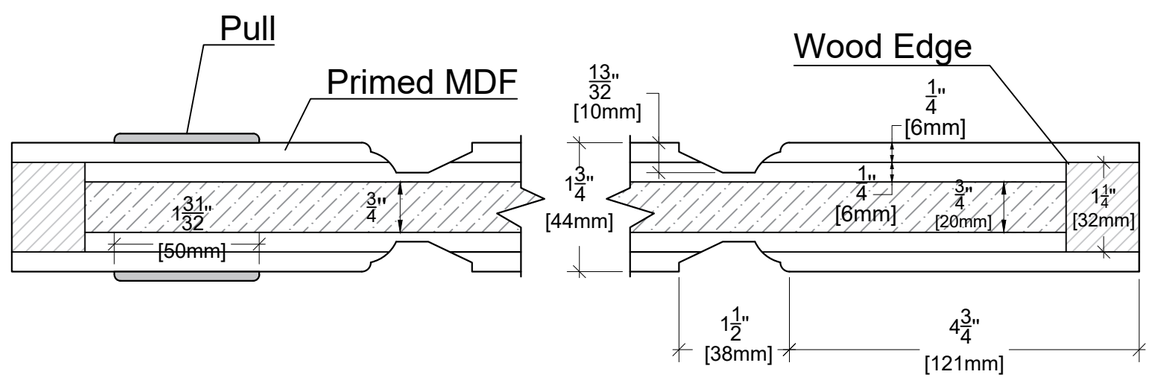

Model: Manhattan Chic - Lenox

Configuration: D Pocket 80"