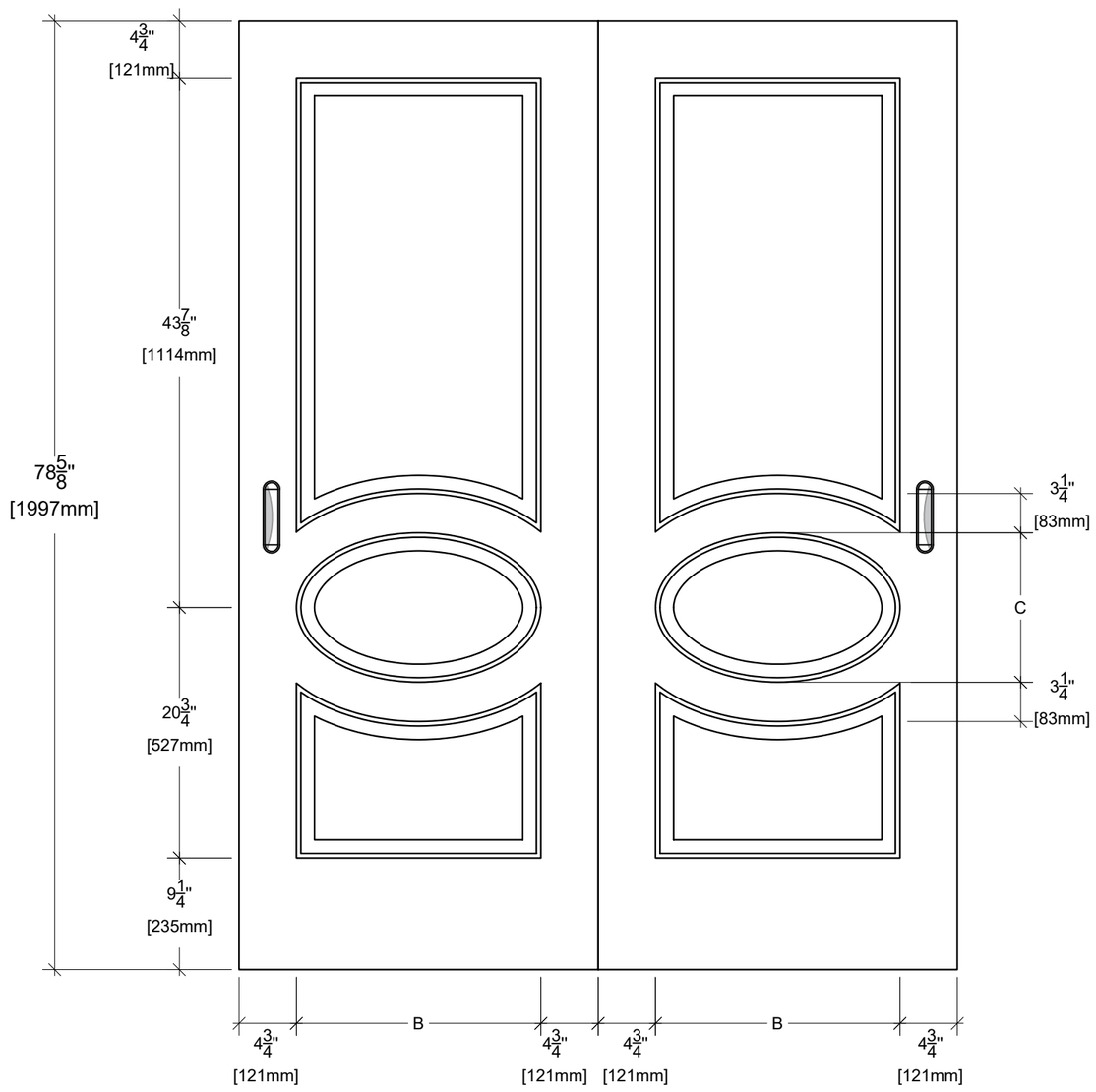

WIDTH	stile	B	stile	C
36"	4-3/4"	26-1/2"	4-3/4"	16-1/2"
34"	4-3/4"	24-1/2"	4-3/4"	15-1/4"
32"	4-3/4"	22-1/2"	4-3/4"	14"
30"	4-3/4"	20-1/2"	4-3/4"	12-3/4"
28"	4-3/4"	18-1/2"	4-3/4"	11-1/2"
26"	4-3/4"	16-1/2"	4-3/4"	10-1/4"
24"	4-3/4"	14-1/2"	4-3/4"	9"

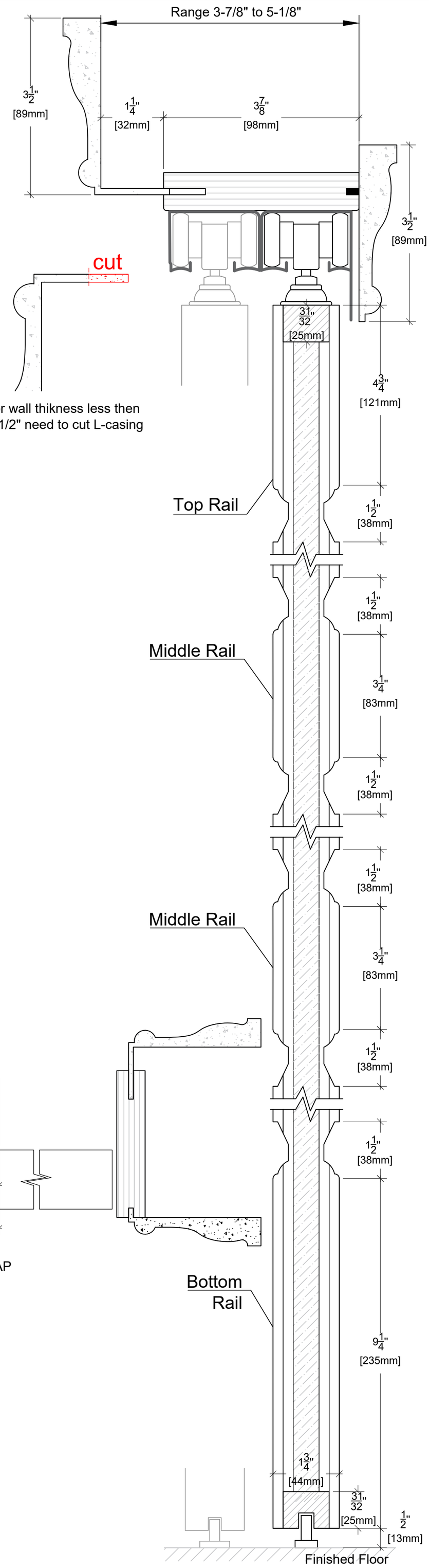

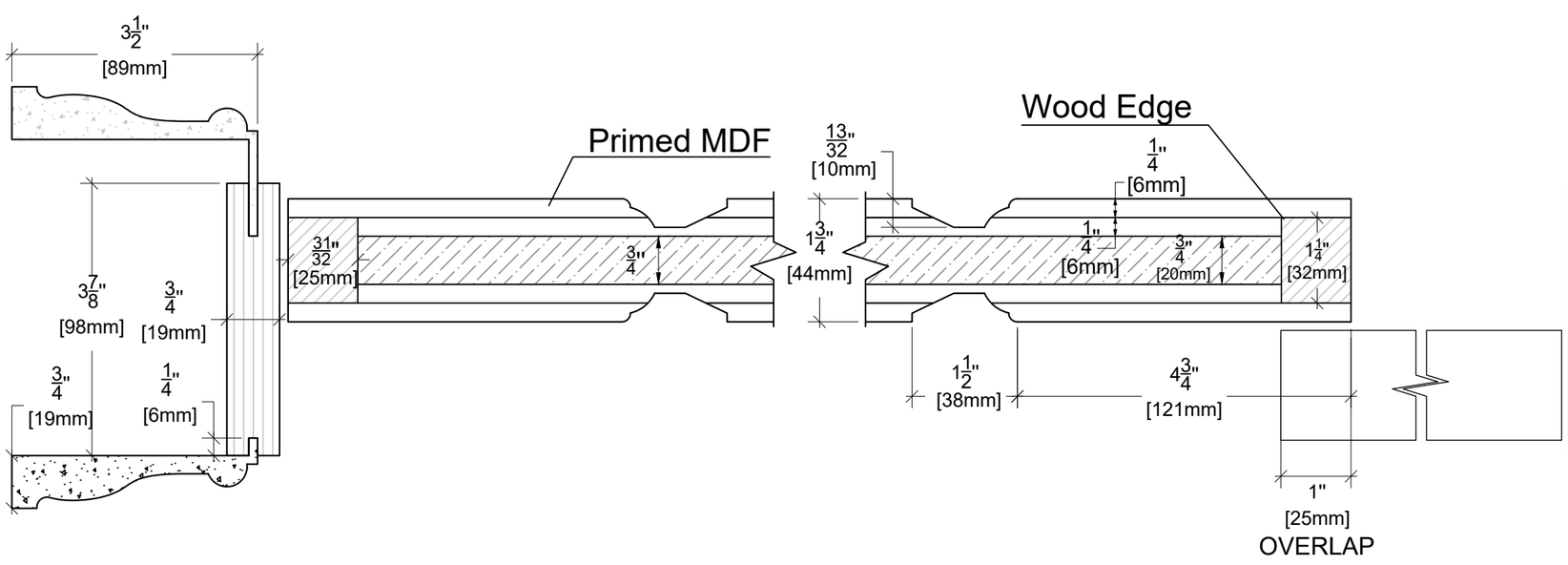

ALMES DOORS

Model: Manhattan Chic - Madison

Configuration: Bypass 81"