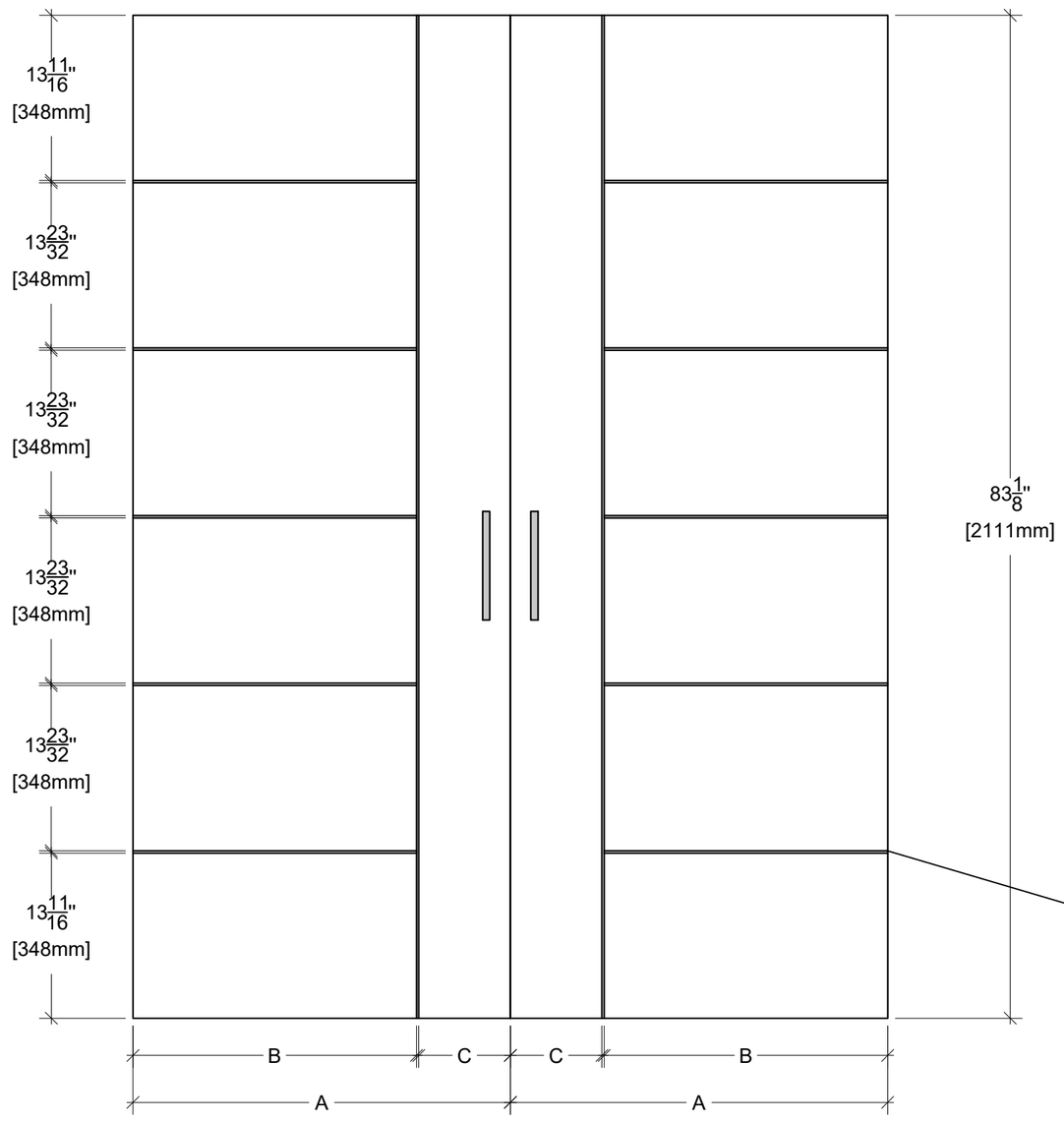

nominal WIDTH	actual A	B	C
74"	39 5/8"	31 5/8"	7 13/16"
66"	35 5/8"	27 5/8"	7 13/16"
62"	33 5/8"	25 5/8"	7 13/16"
58"	31 5/8"	23 5/8"	7 13/16"
50"	27 5/8"	19 5/8"	7 13/16"

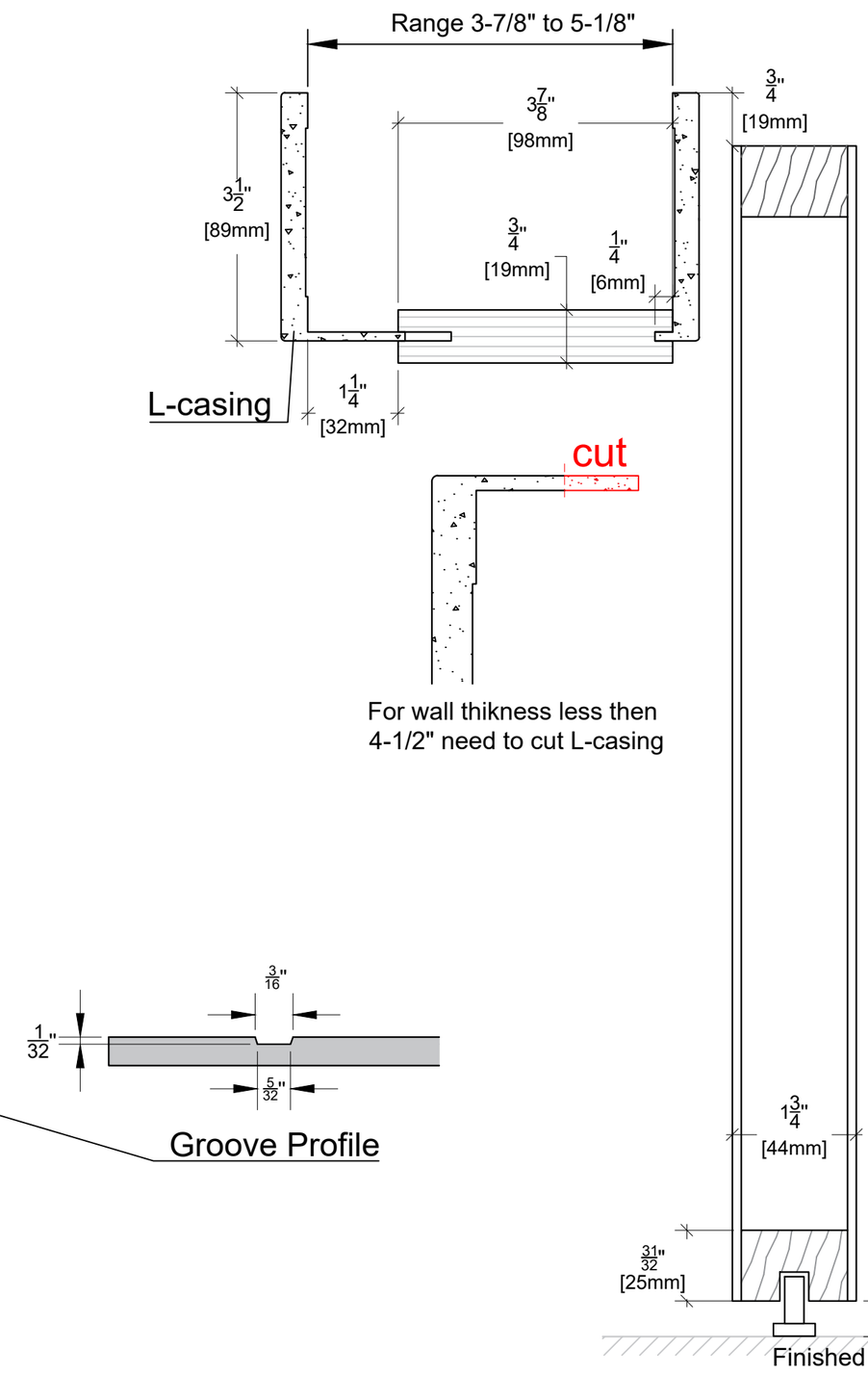

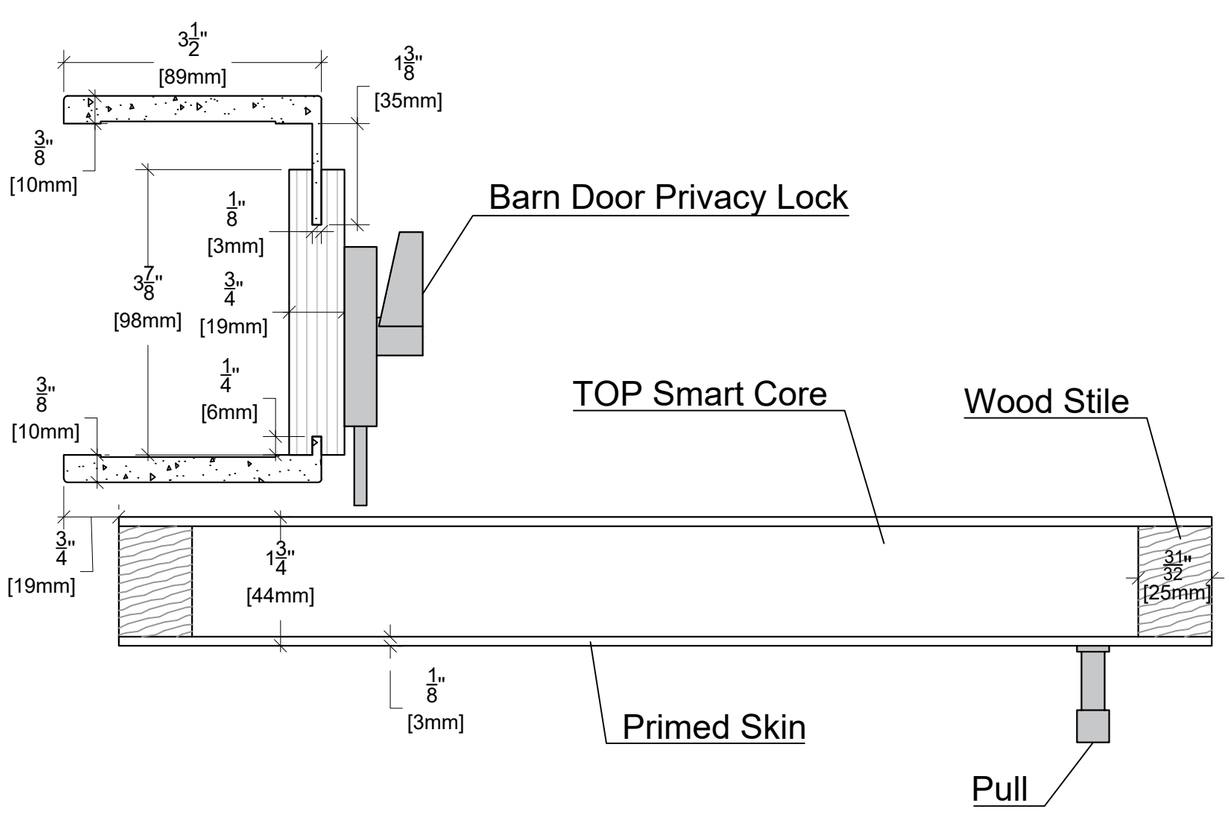

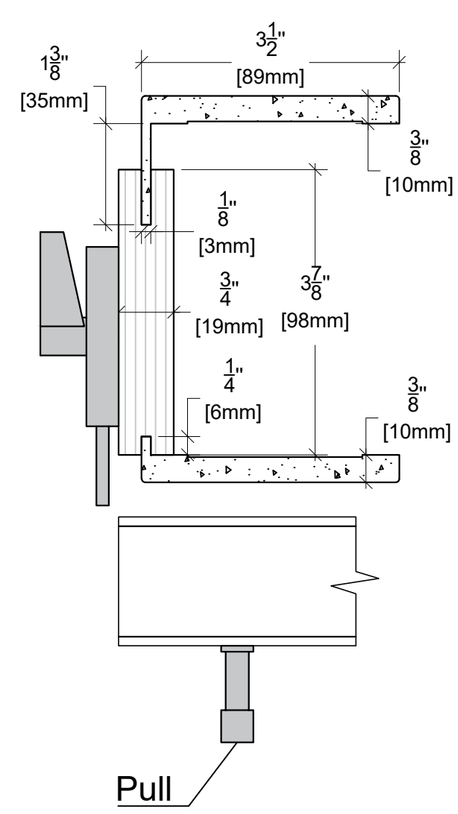

ALMES DOORS

Model: Manhattan Swank - Chelsea

Configuration: D Barn 82"