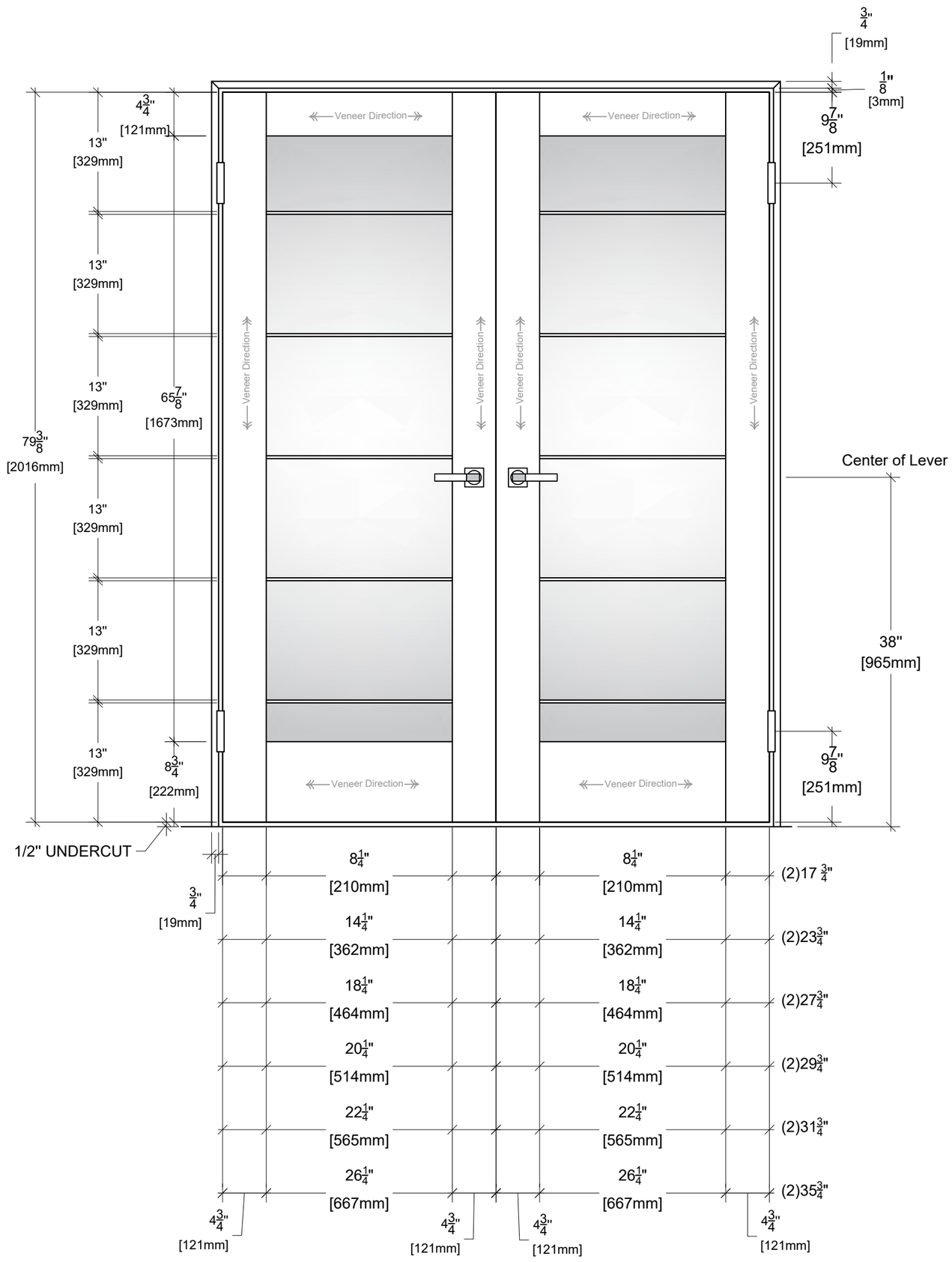

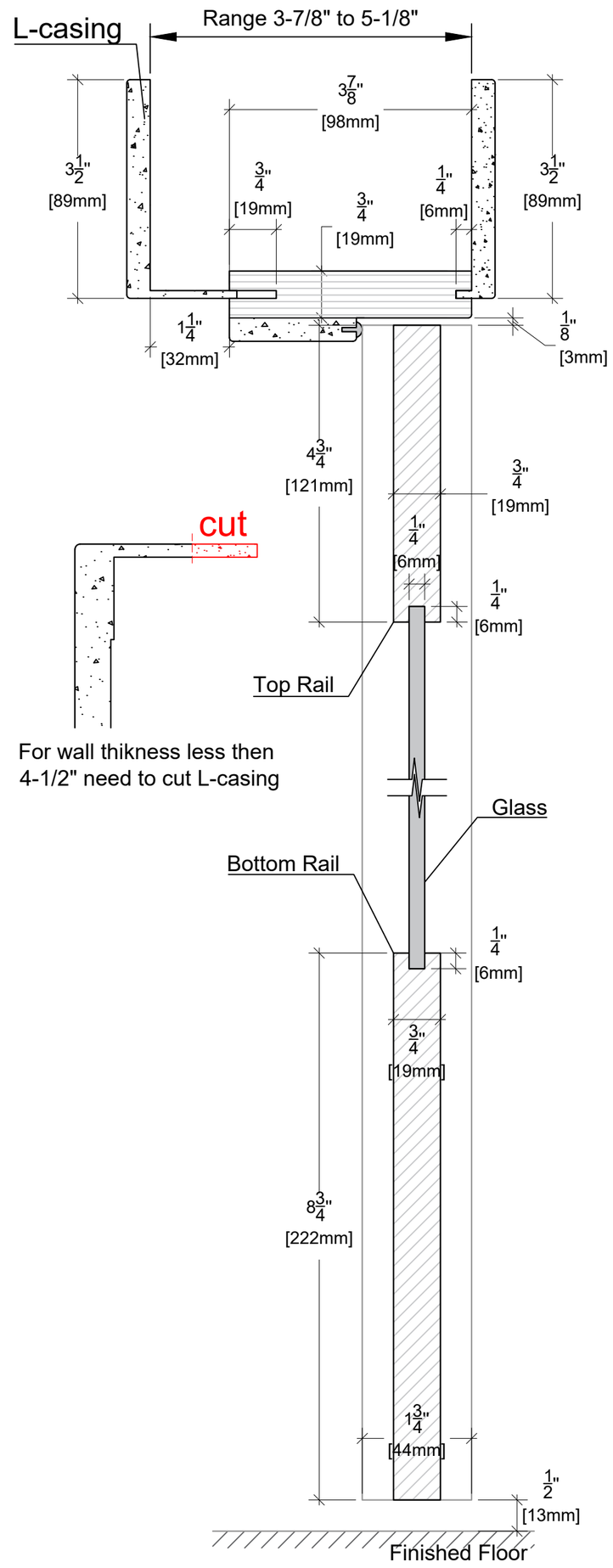

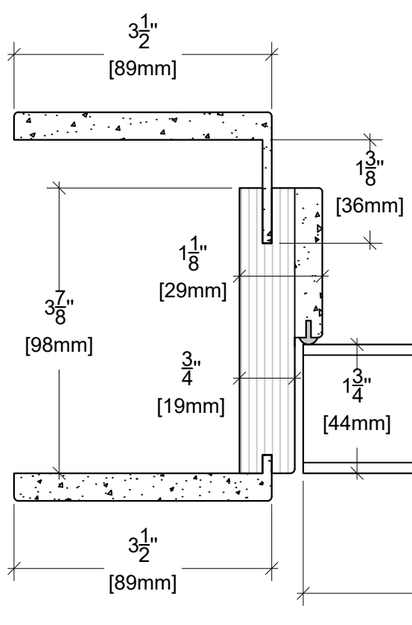

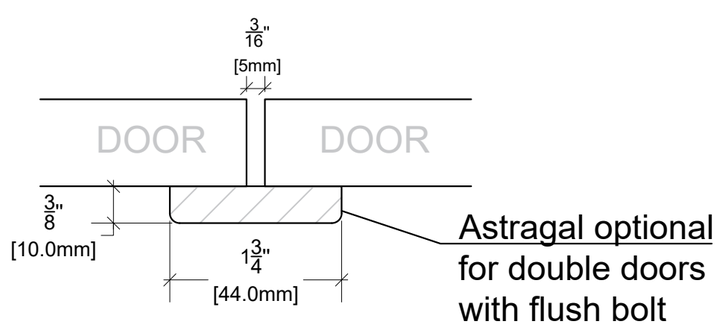

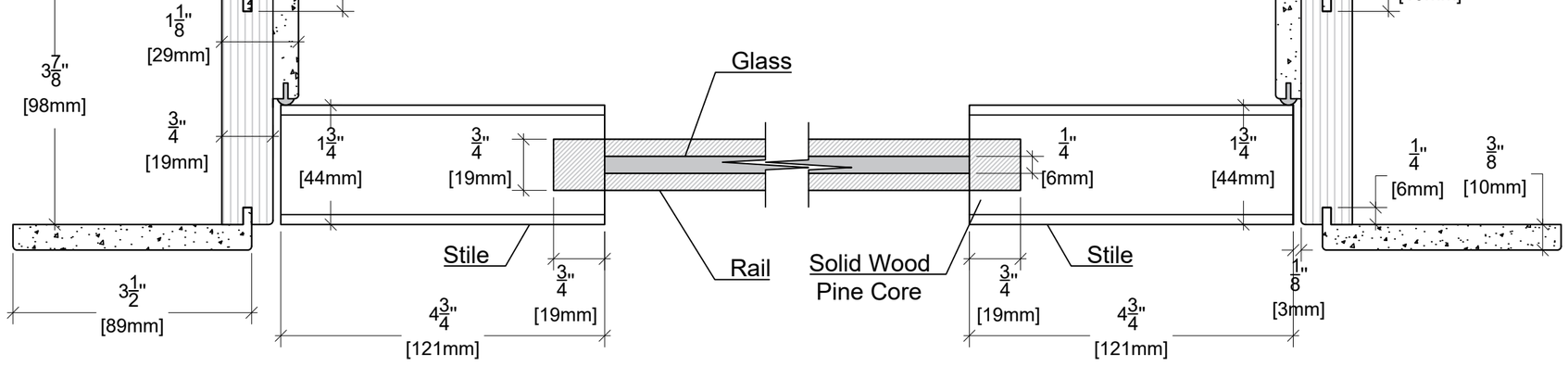

ALMES DOORS

Model: Moderna - Infinity La Luce

Configuration: D Swing 80"