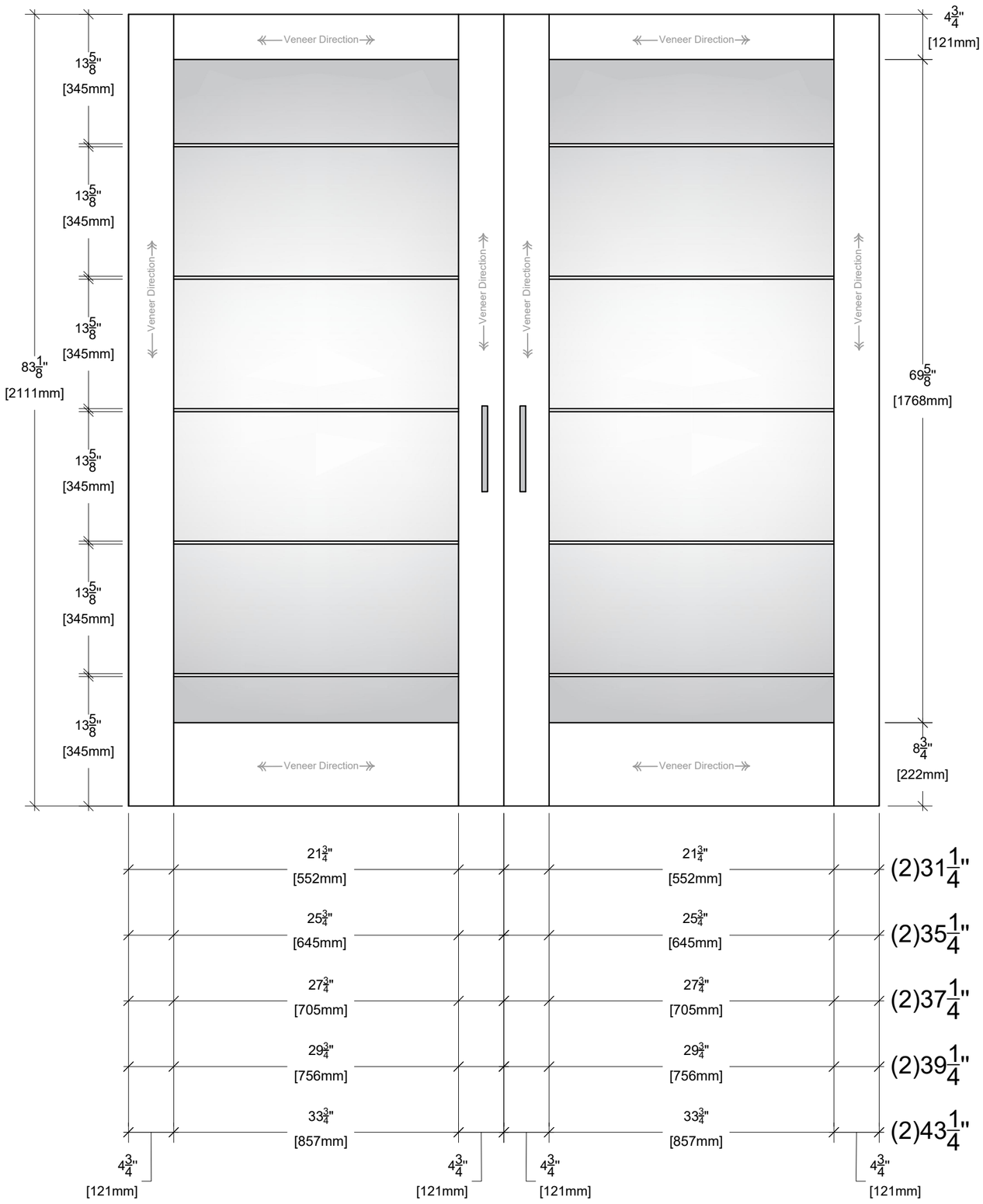


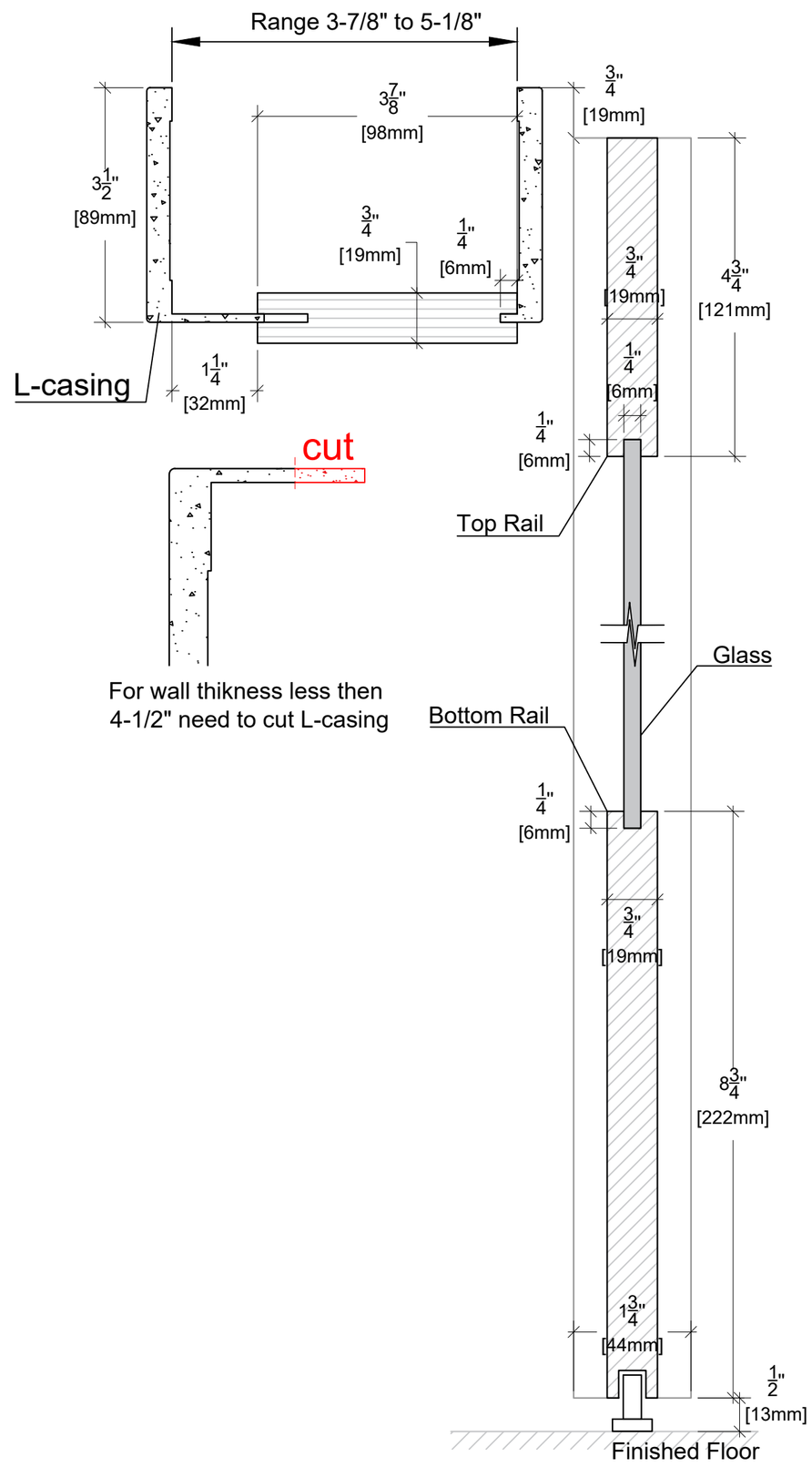


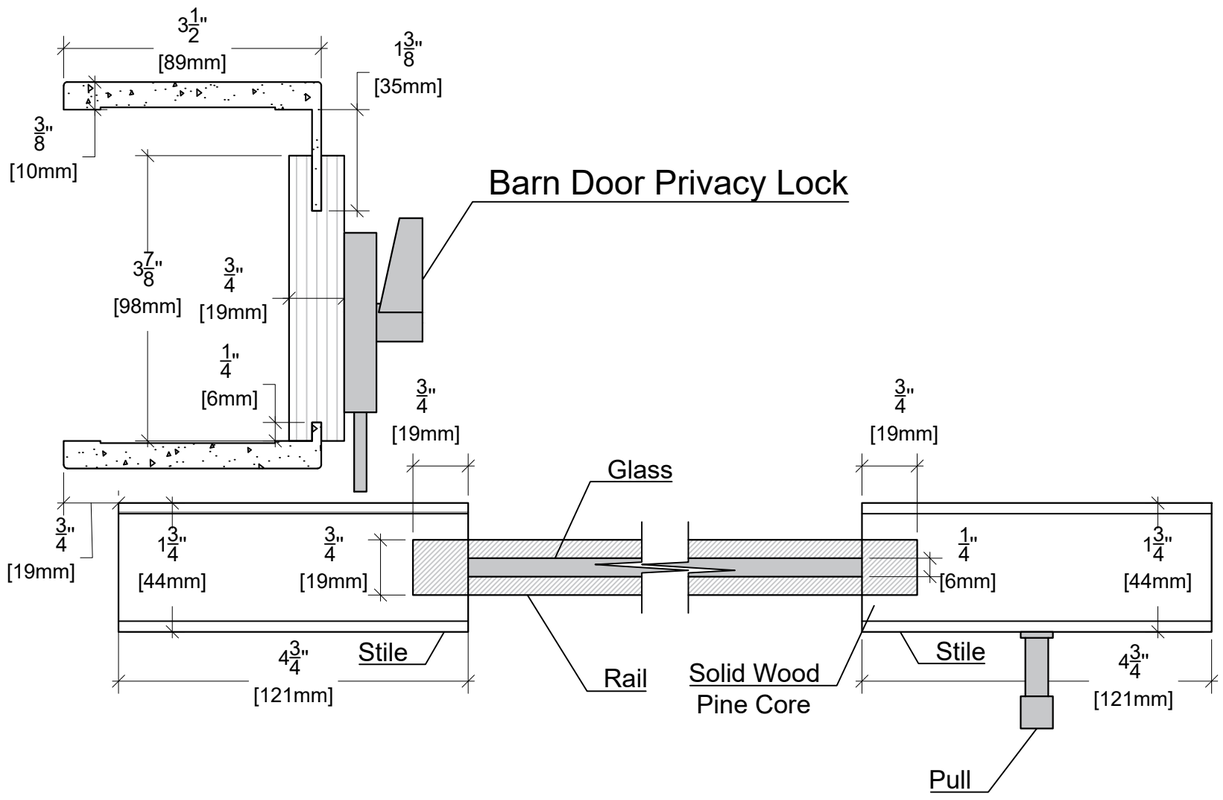


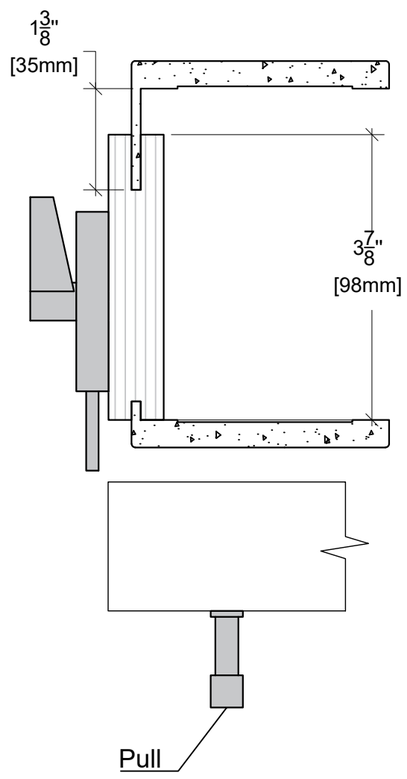


ALMES DOORS

Model: Moderna - Infinity La Luce

Configuration: D Barn 82"