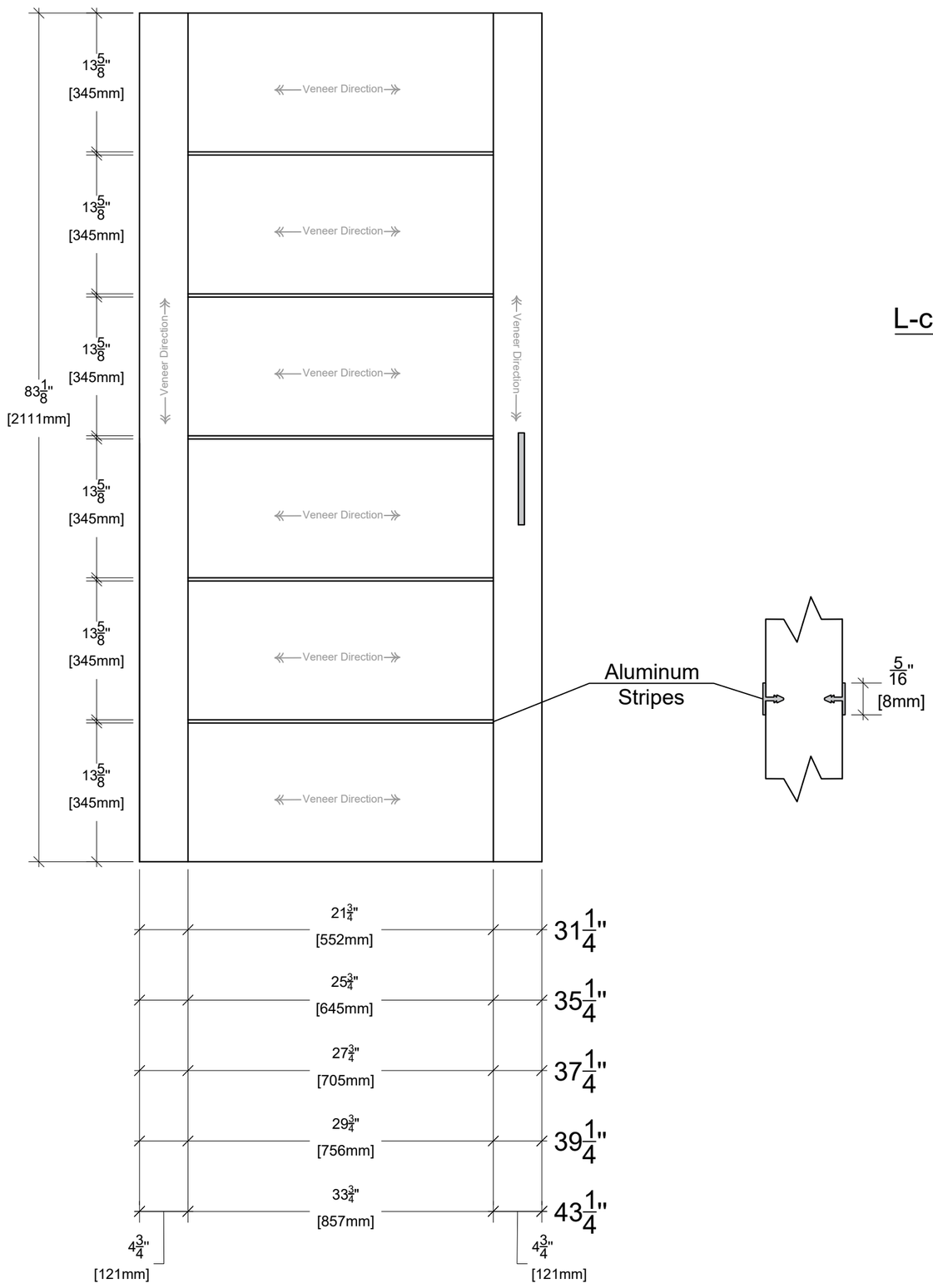

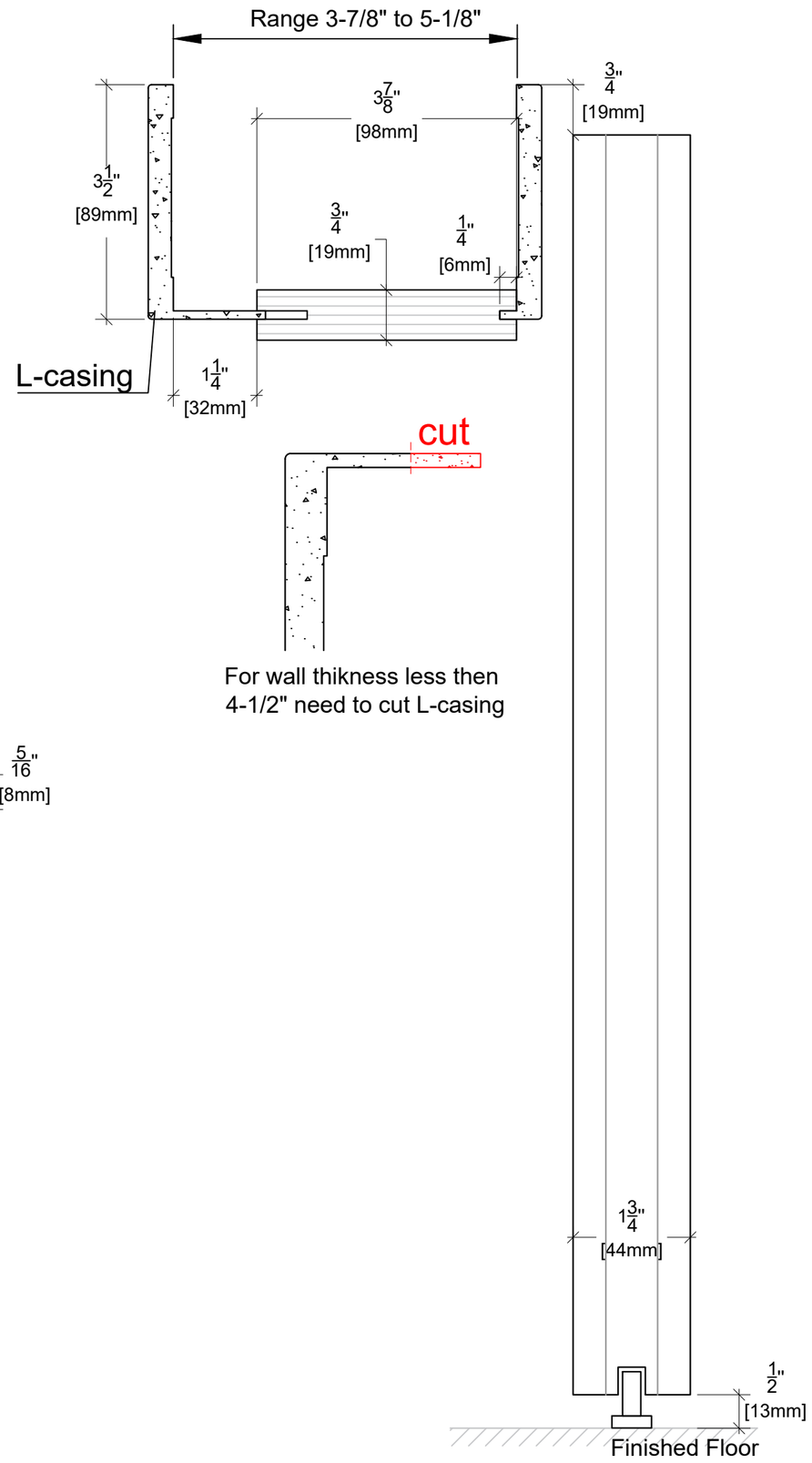

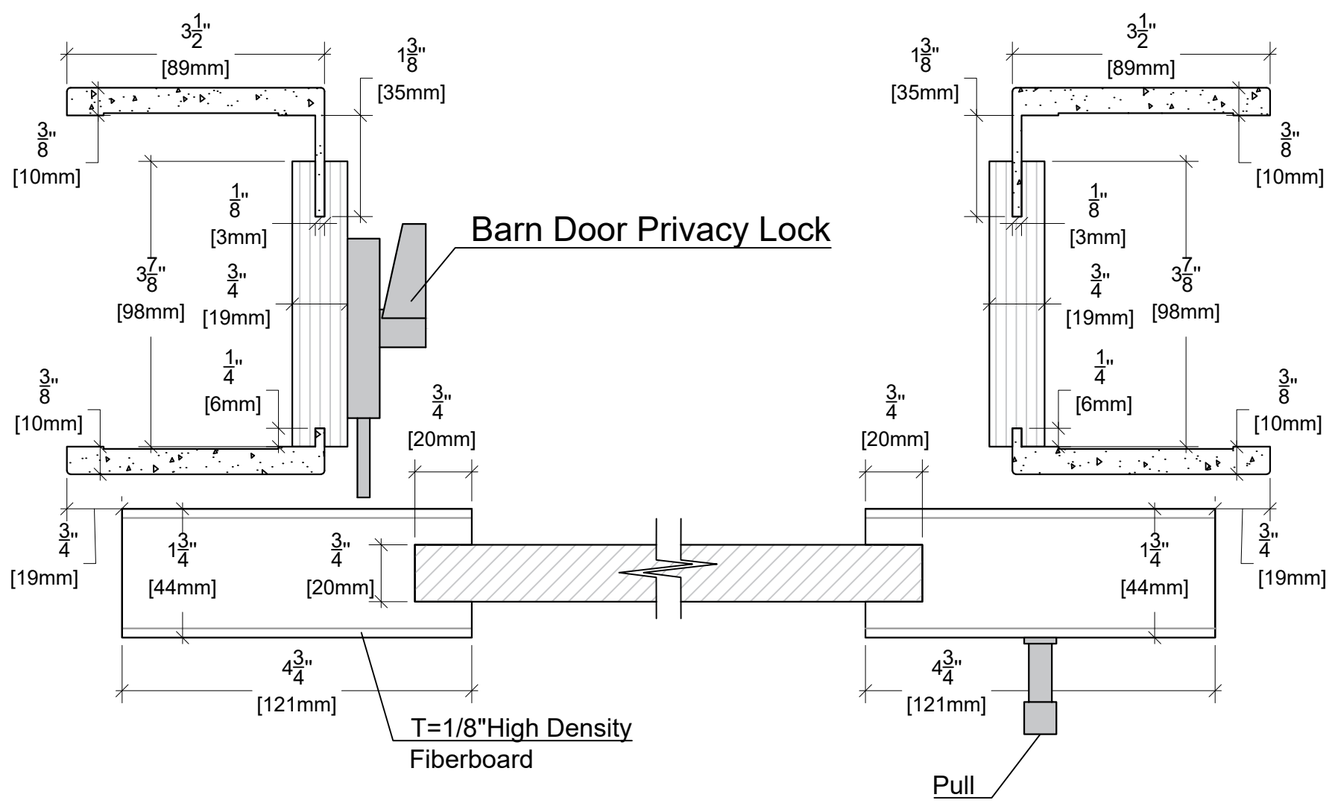

ALMES DOORS

Model: Moderna - Infinity

Configuration: Barn 82"