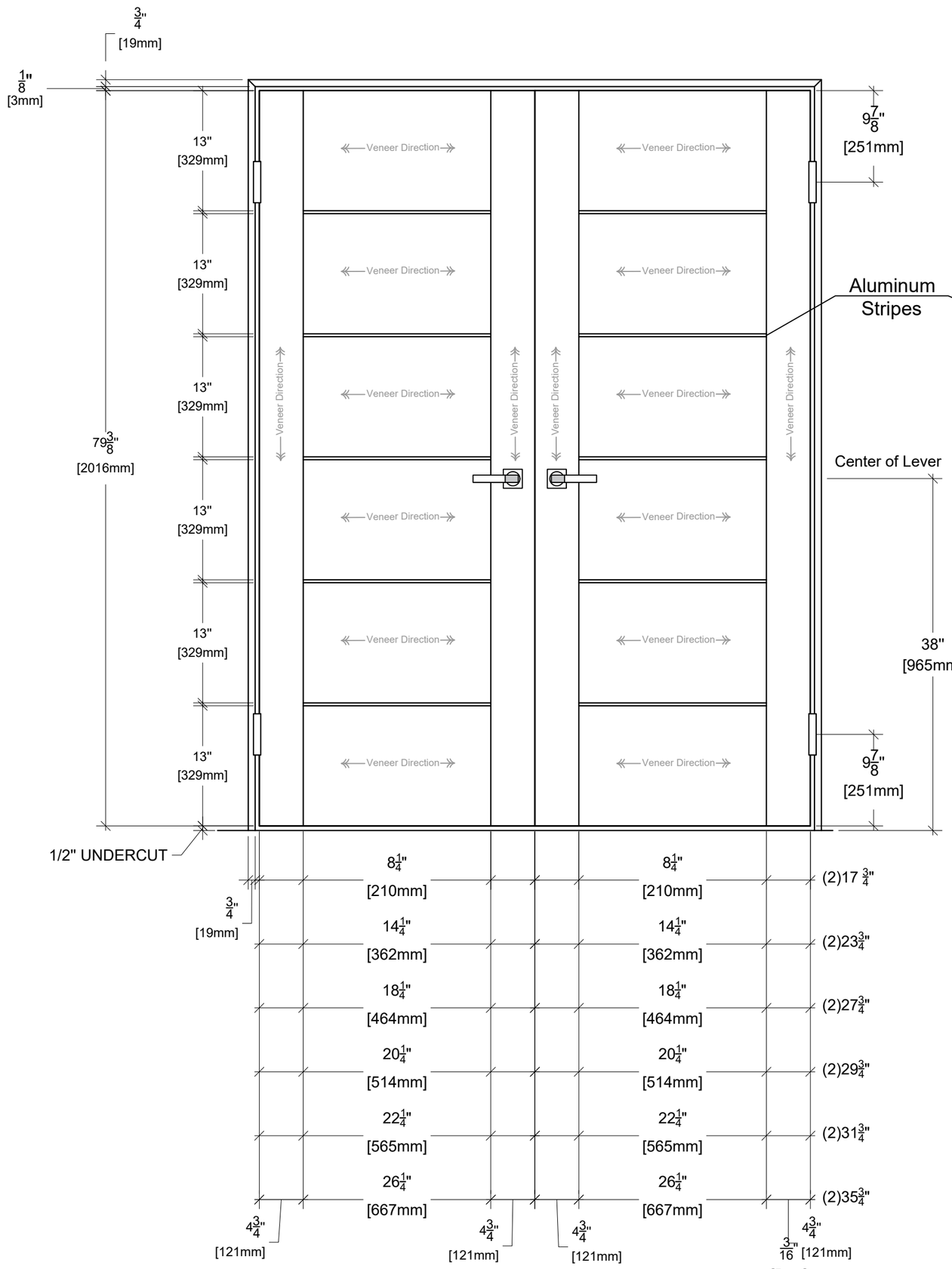

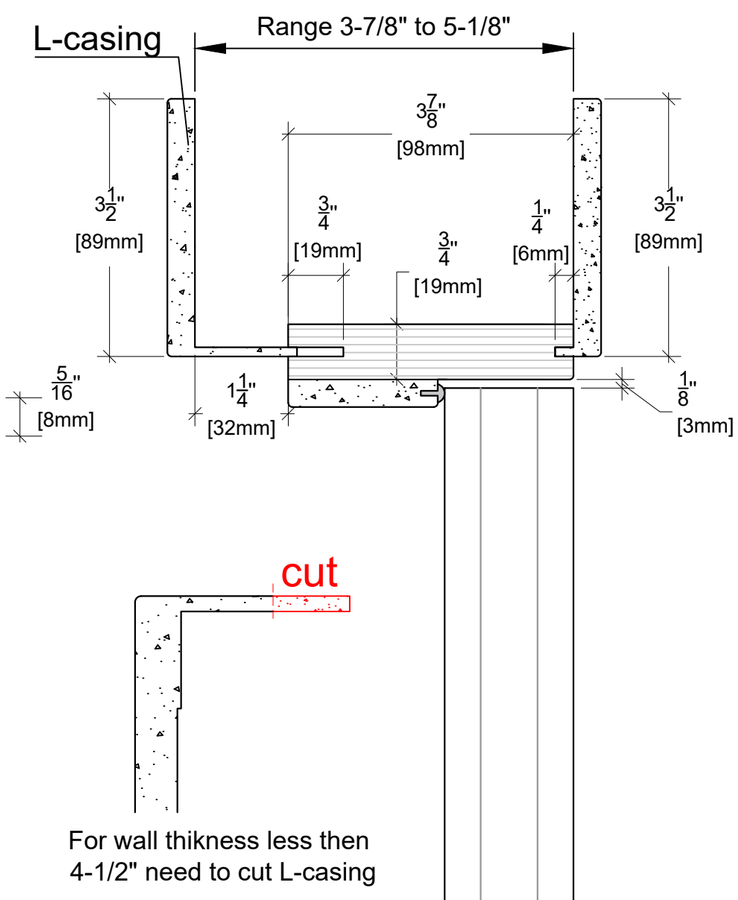

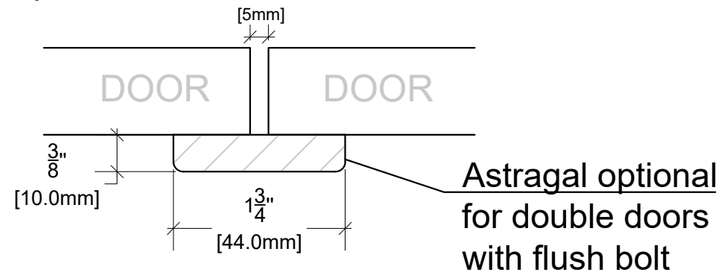

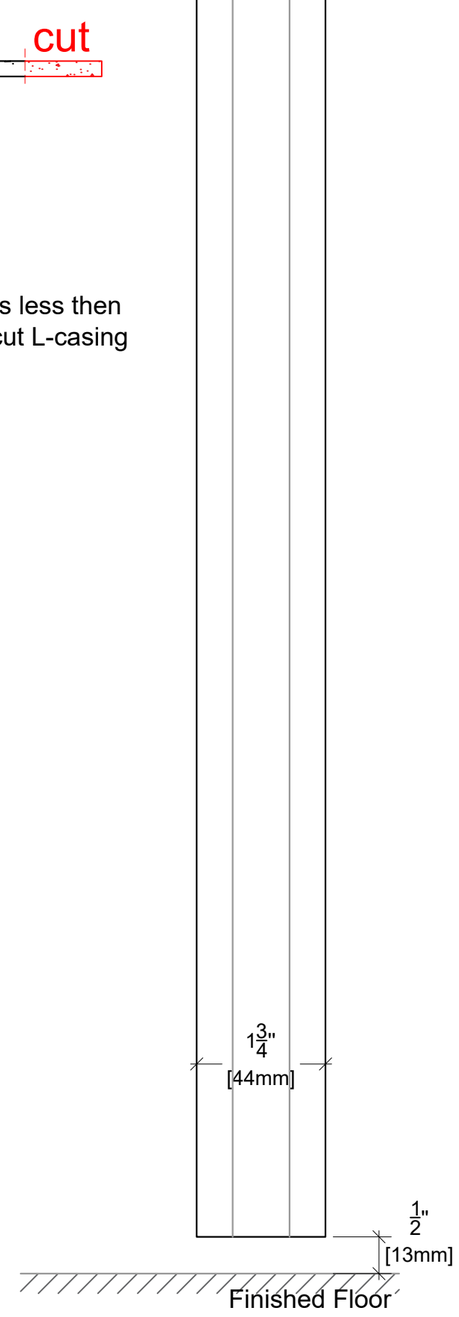

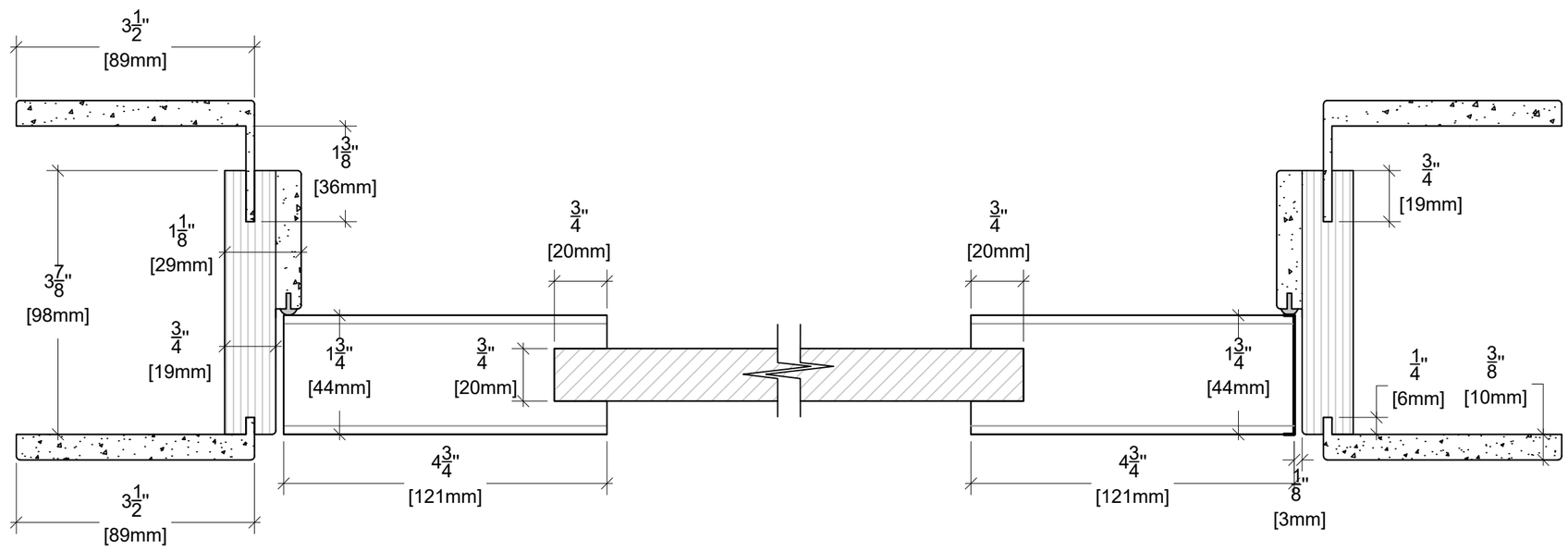

ALMES DOORS

Model: Moderna - Infinity

Configuration: D Swing 80"