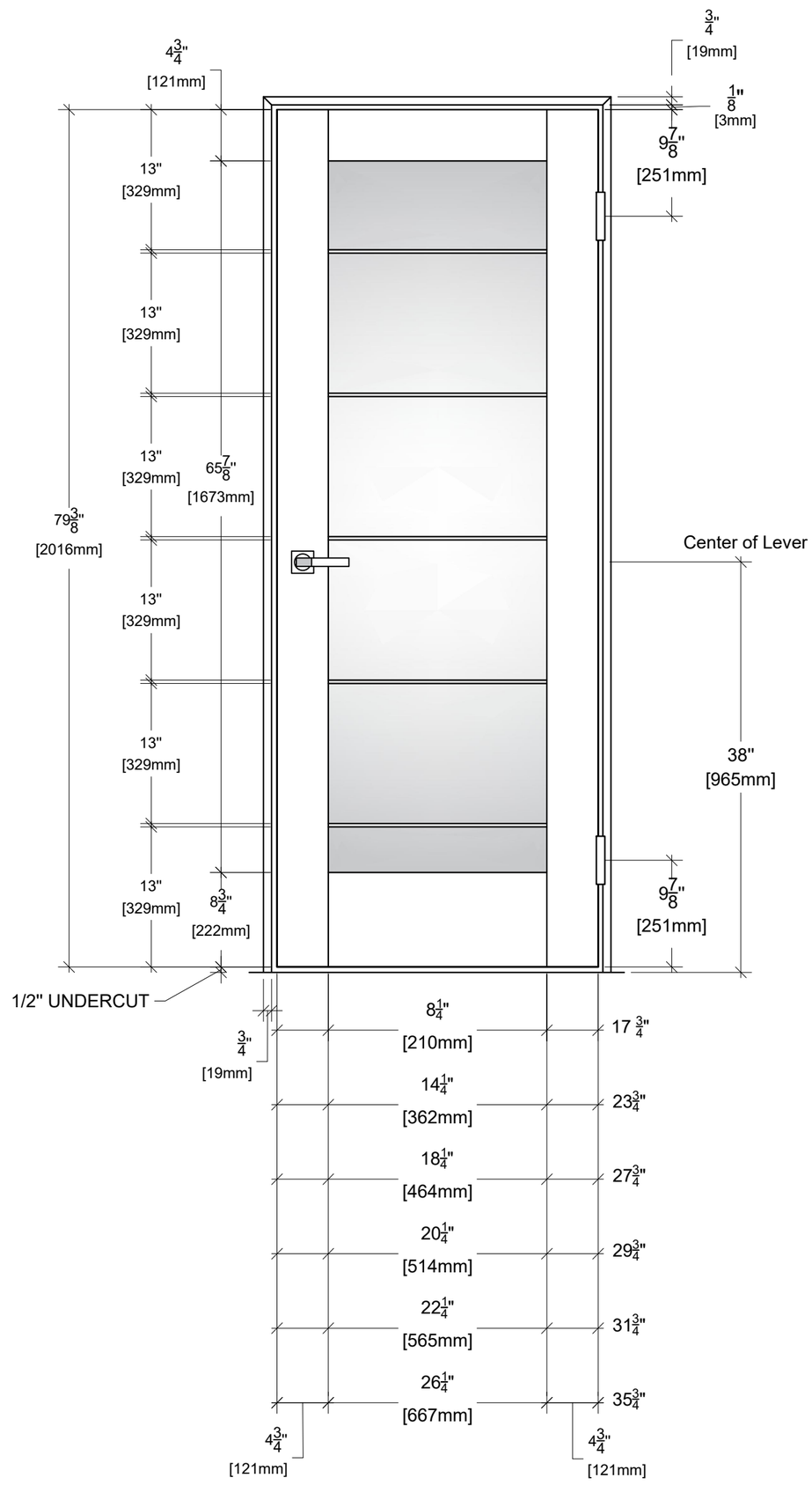

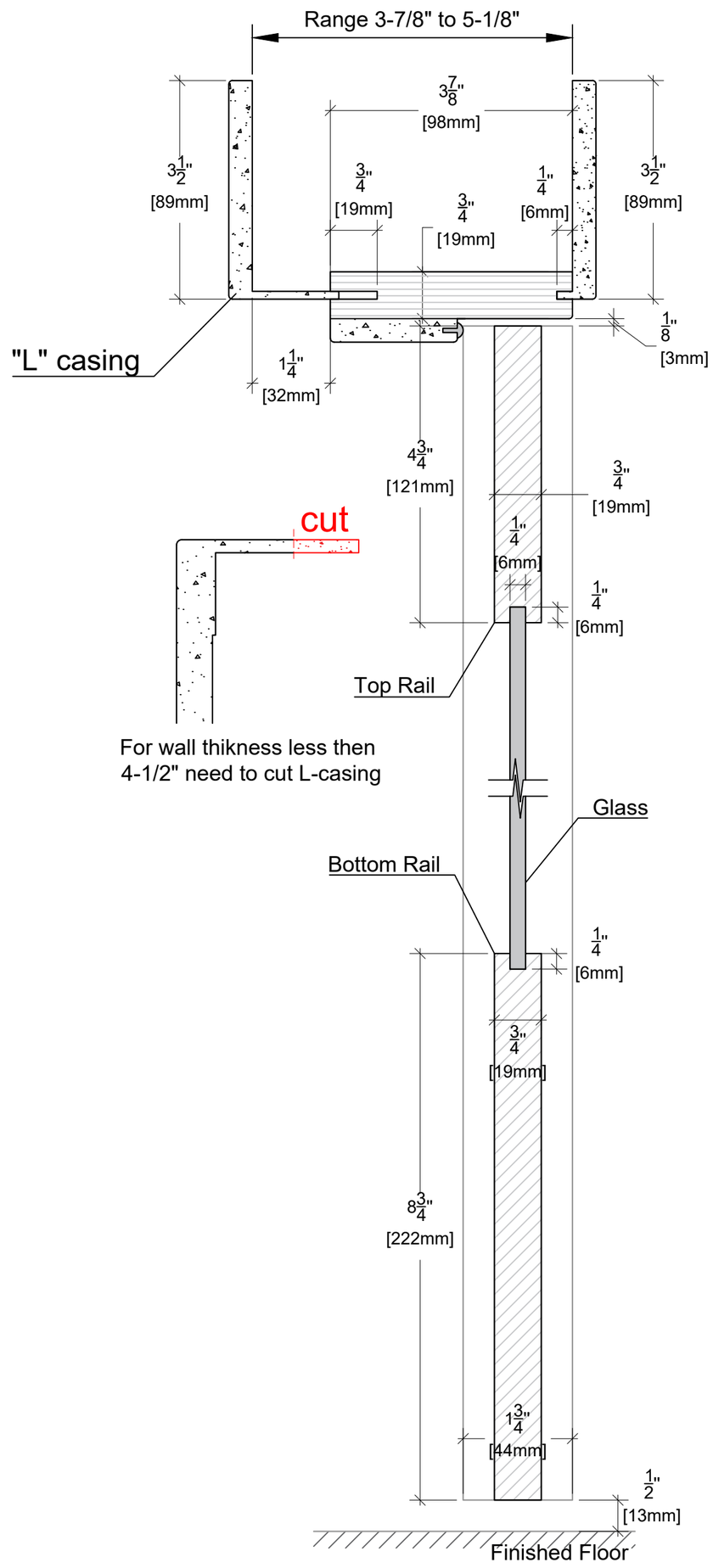

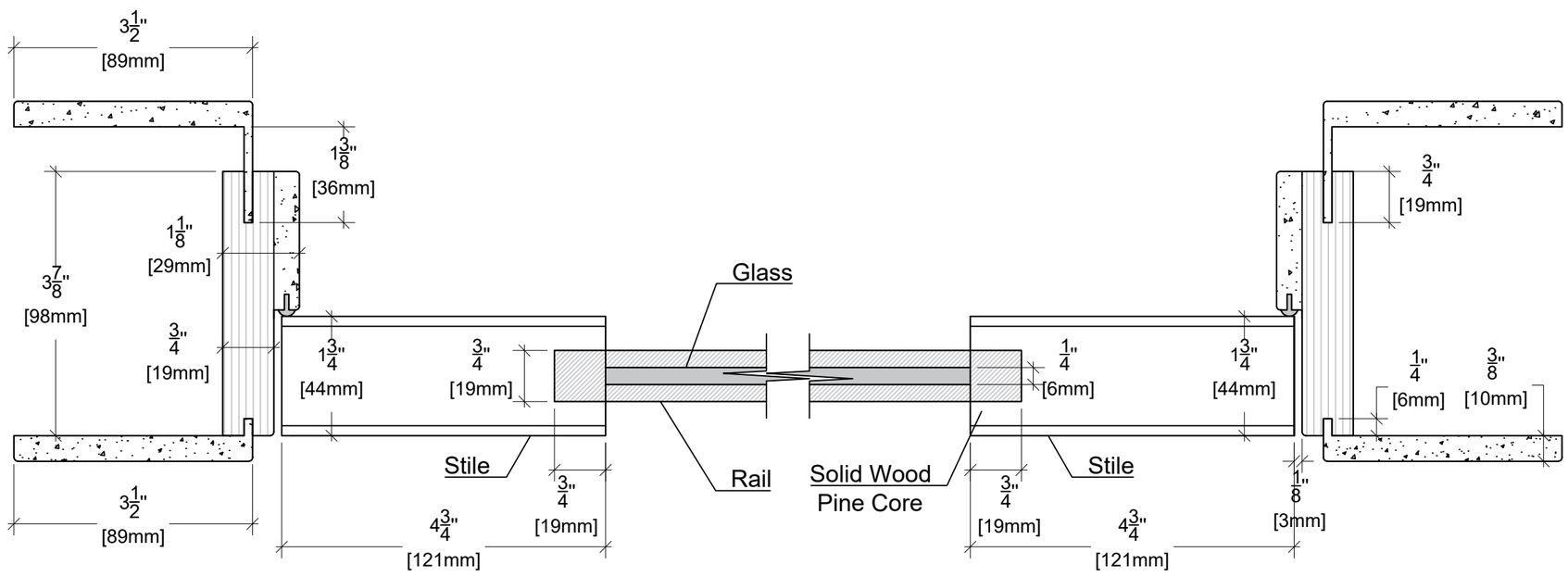

ALMES DOORS

Model: Moderna - Infinity La Luce

Configuration: Swing 80"