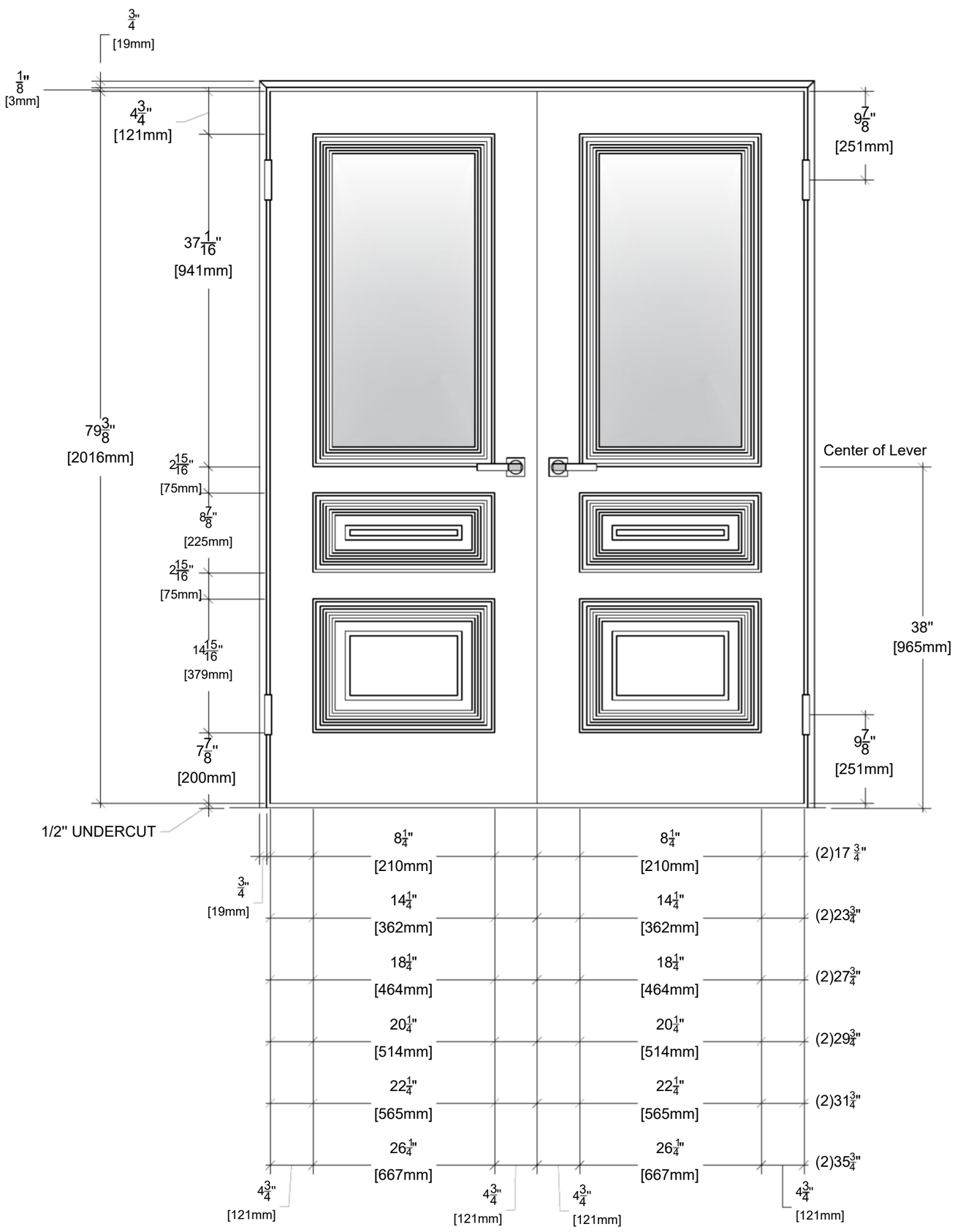

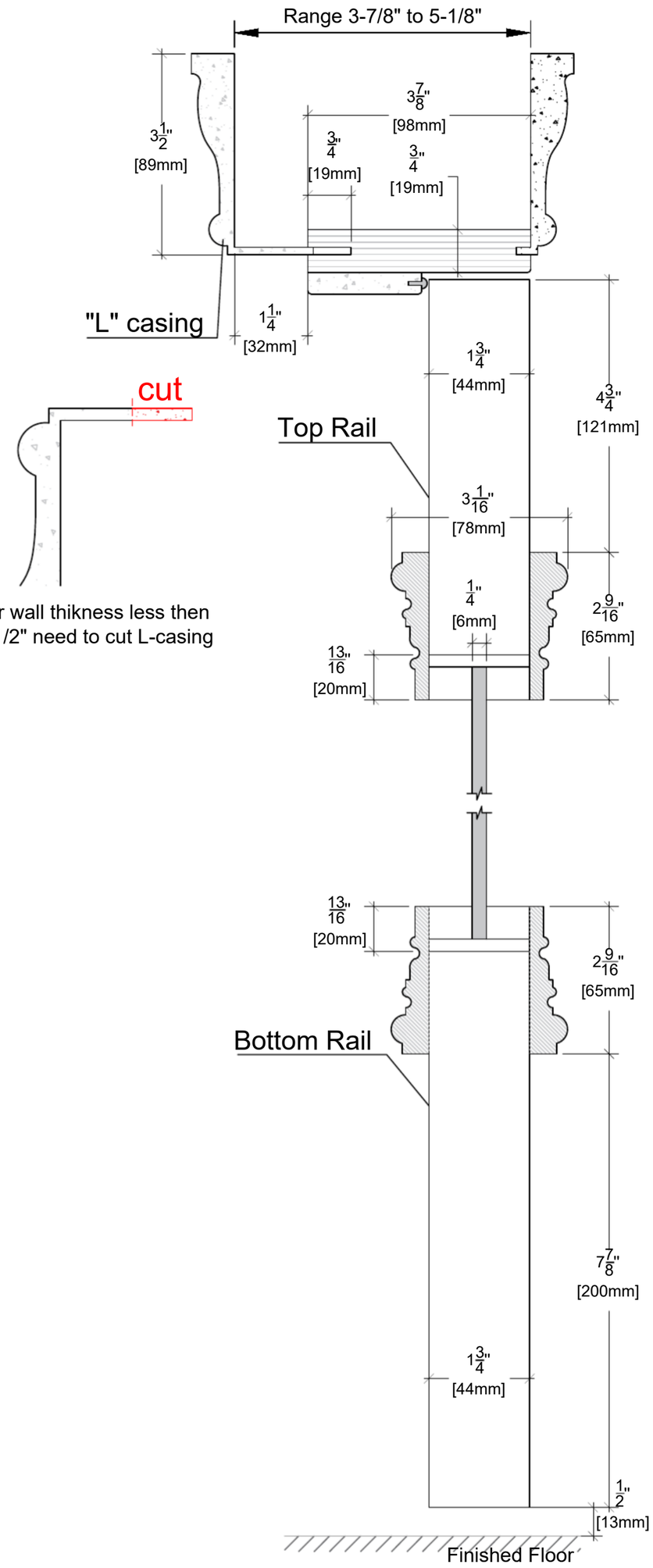

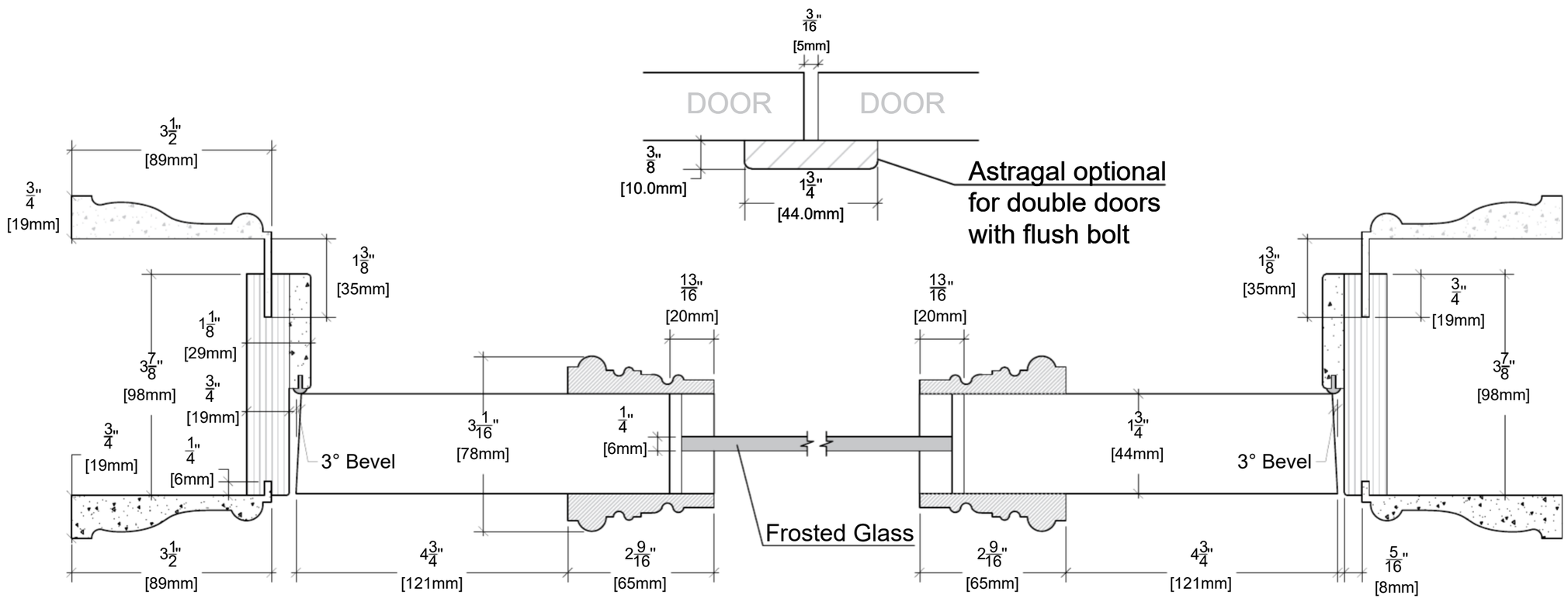

ALMES DOORS

Model: Palladio Tre - Frosted Glass

Configuration: D Swing 80"