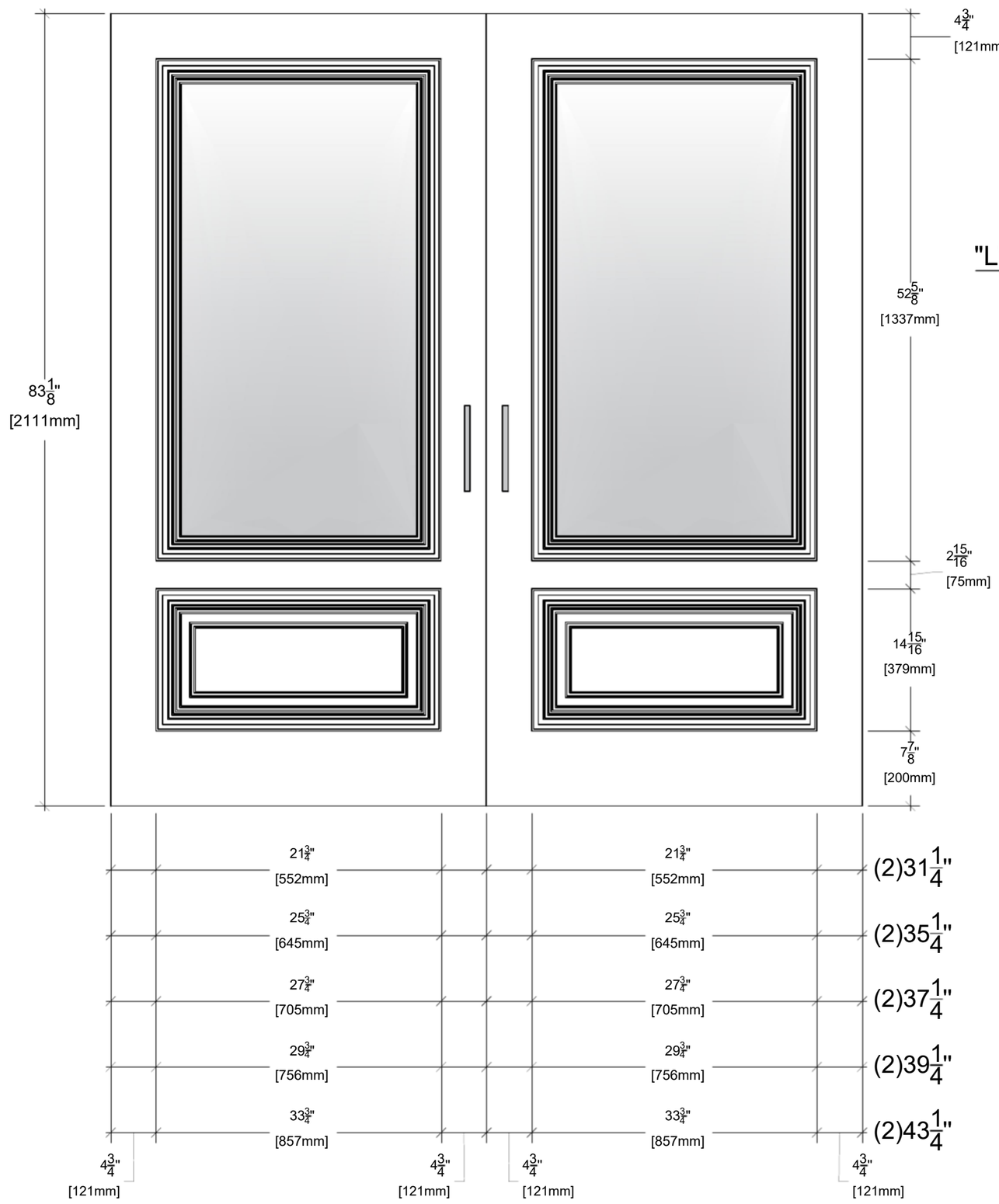

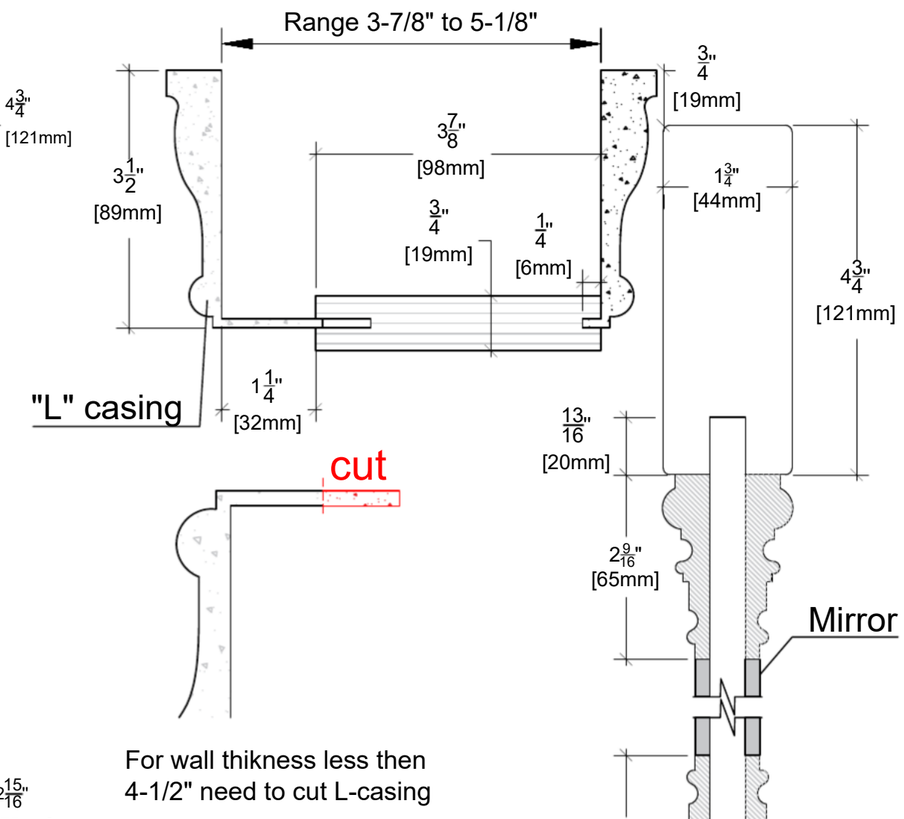

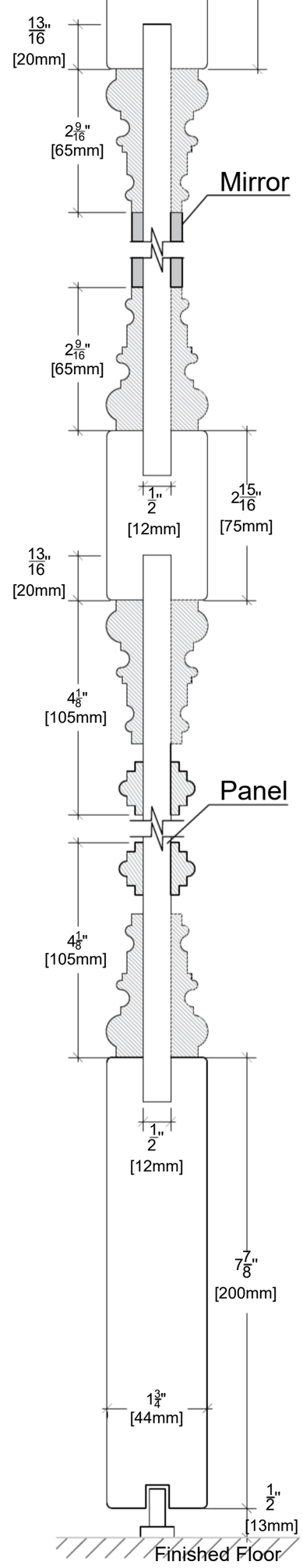

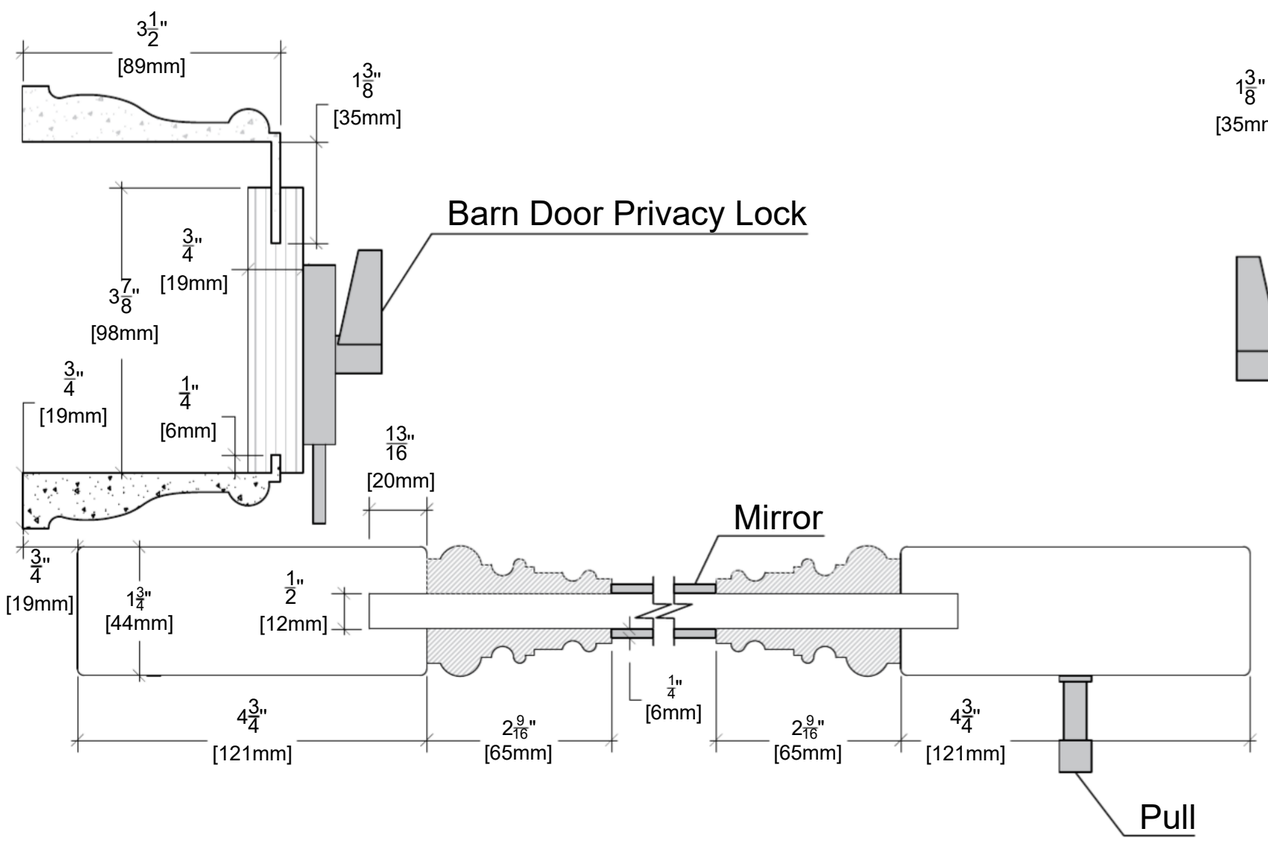

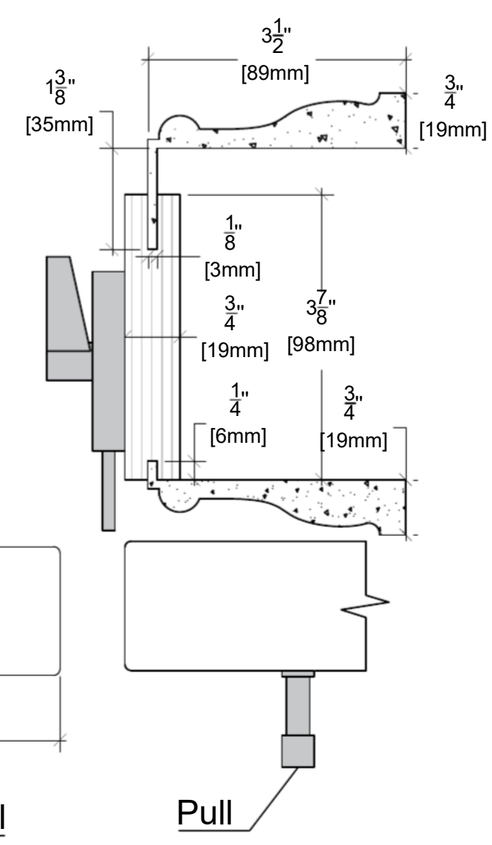

ALMES DOORS

Model: Palladio Due Mirror

Configuration: D Barn 82"