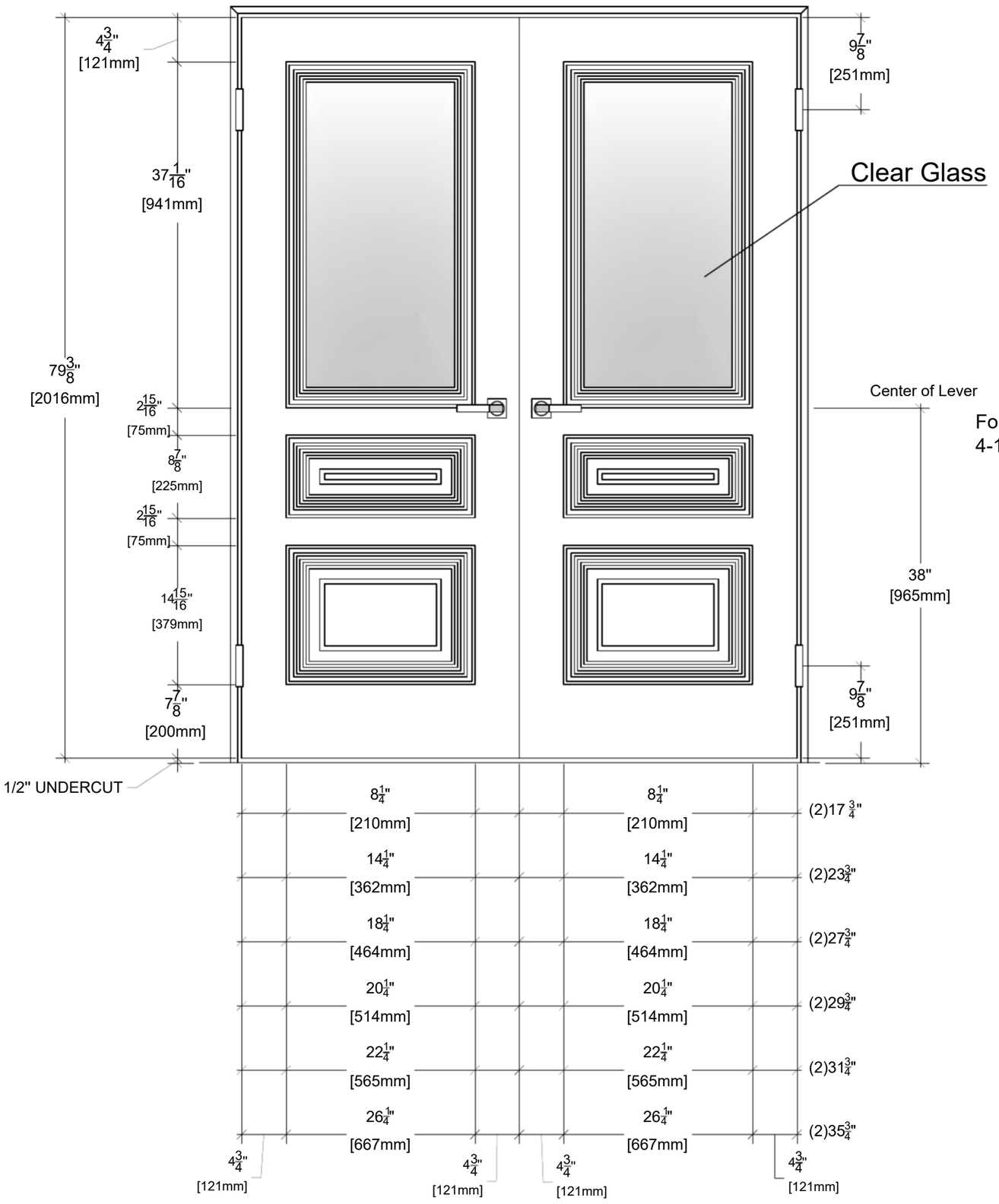


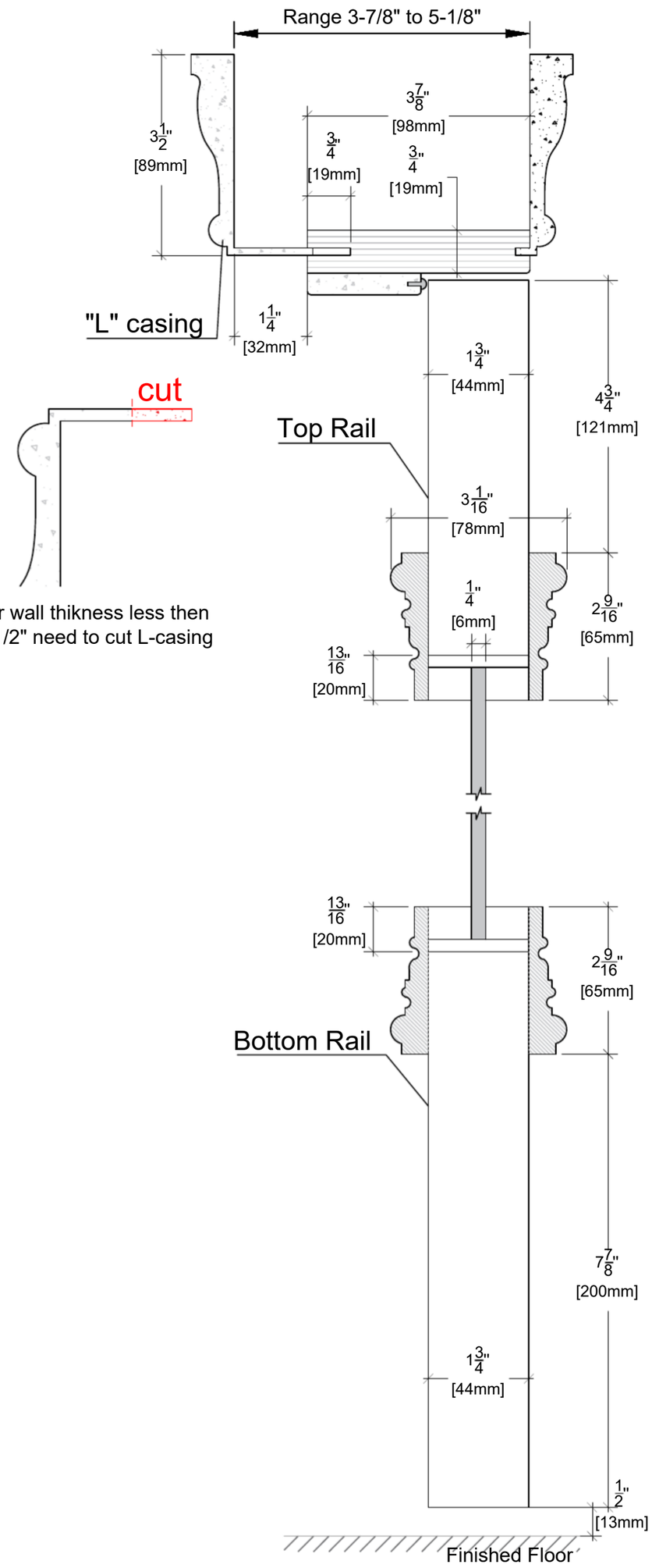


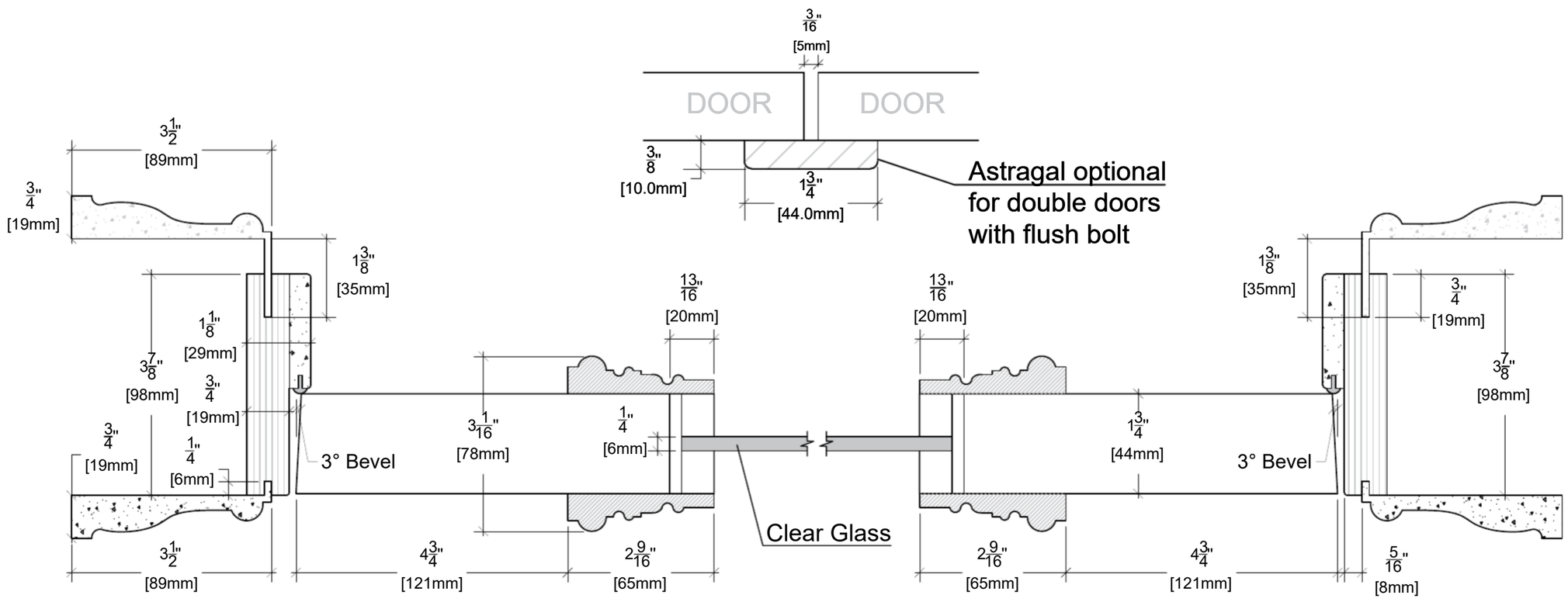


ALMES DOORS

Model: Palladio Tre - Clear Glass

Configuration: D Swing 80"