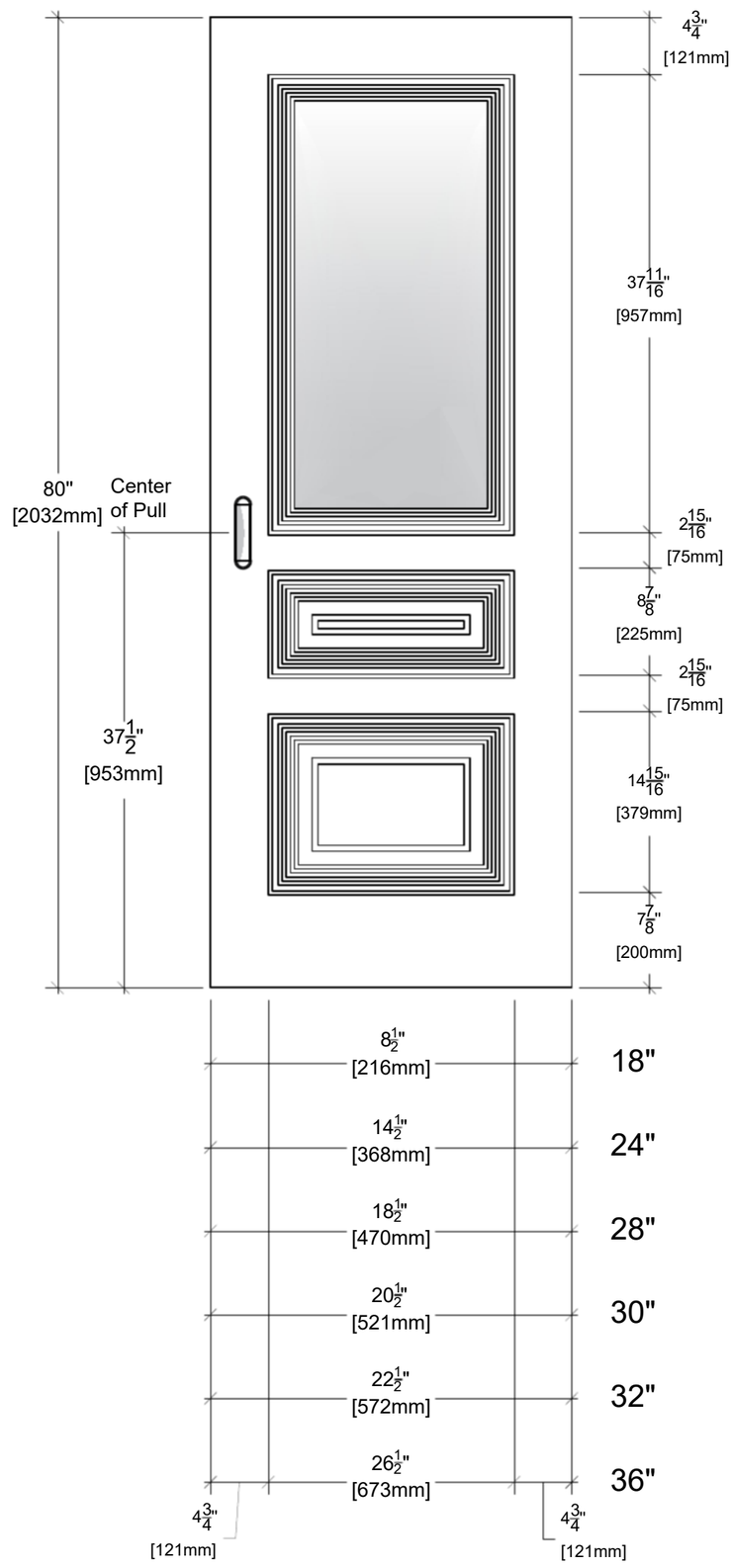

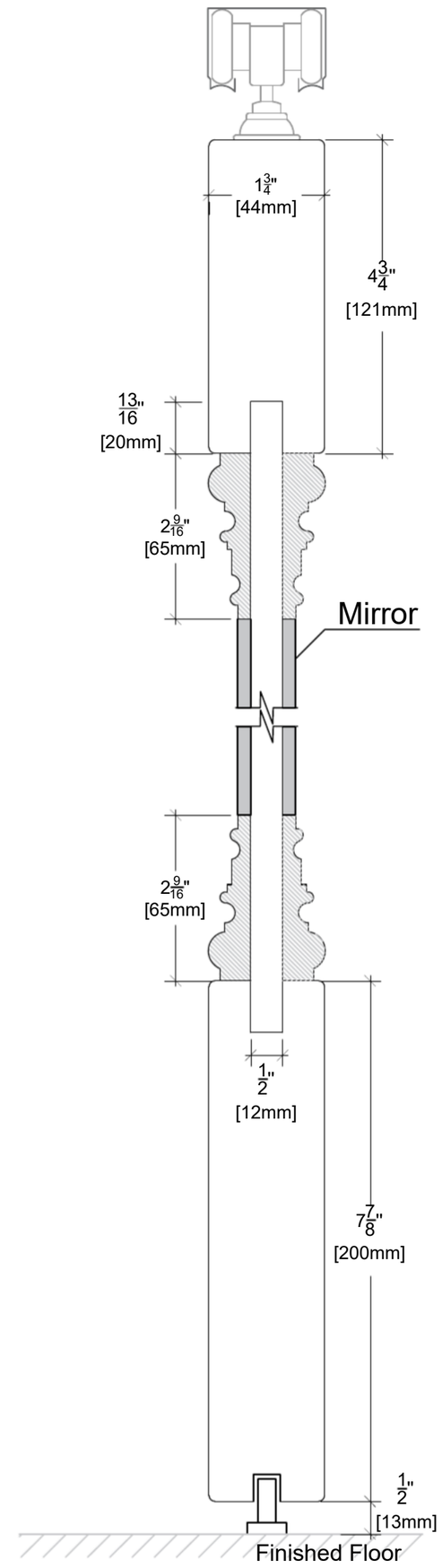

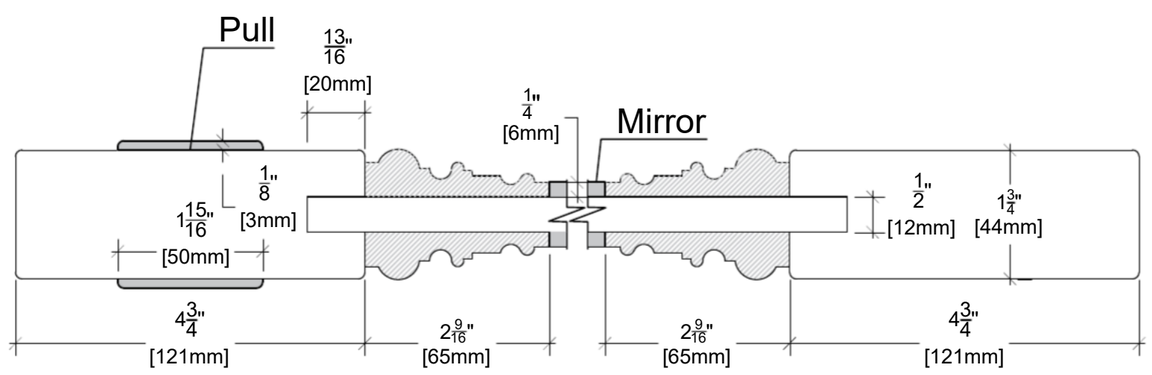

ALMES DOORS

Model: Palladio - Tre Mirror

Configuration: Pocket 80"