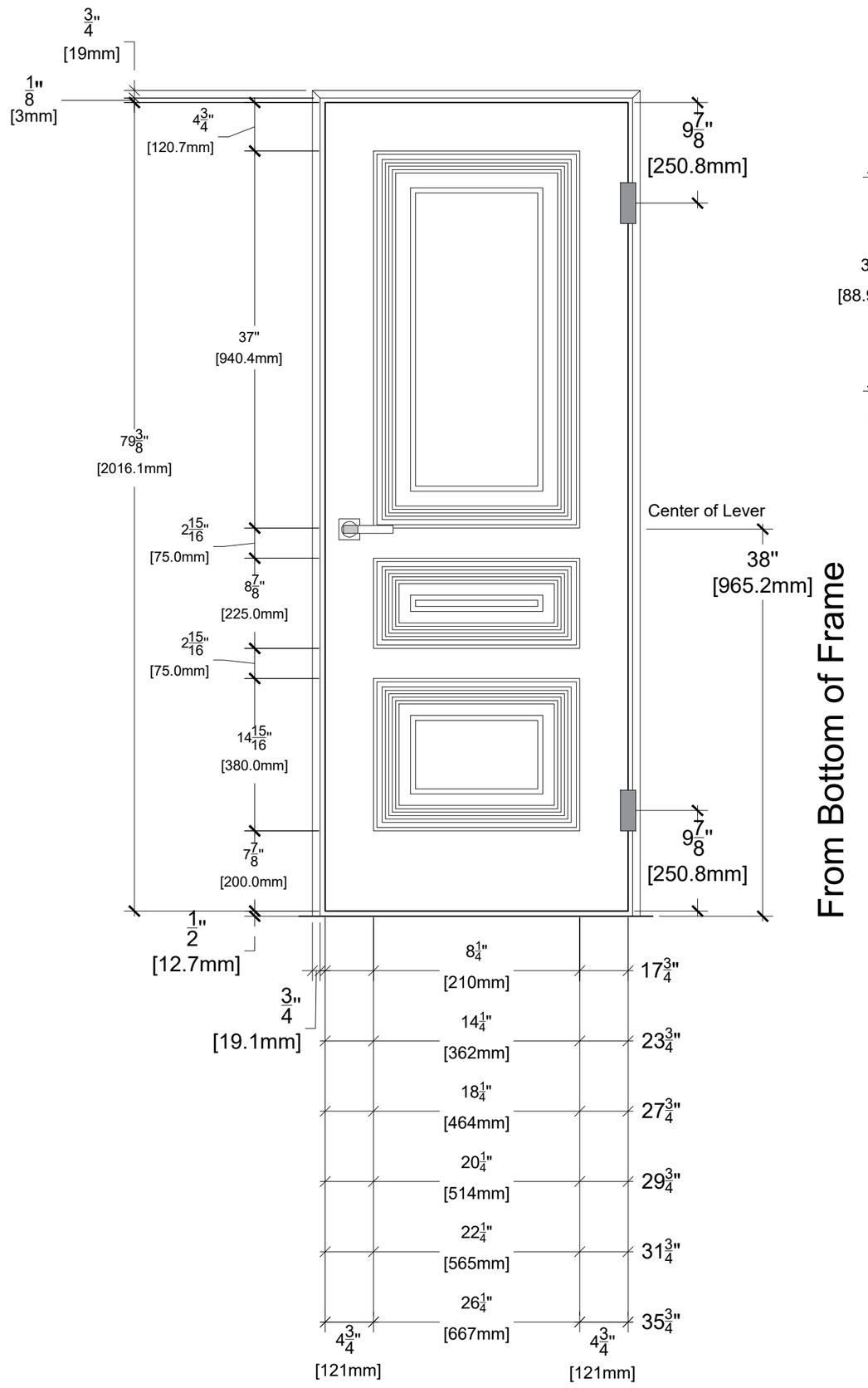

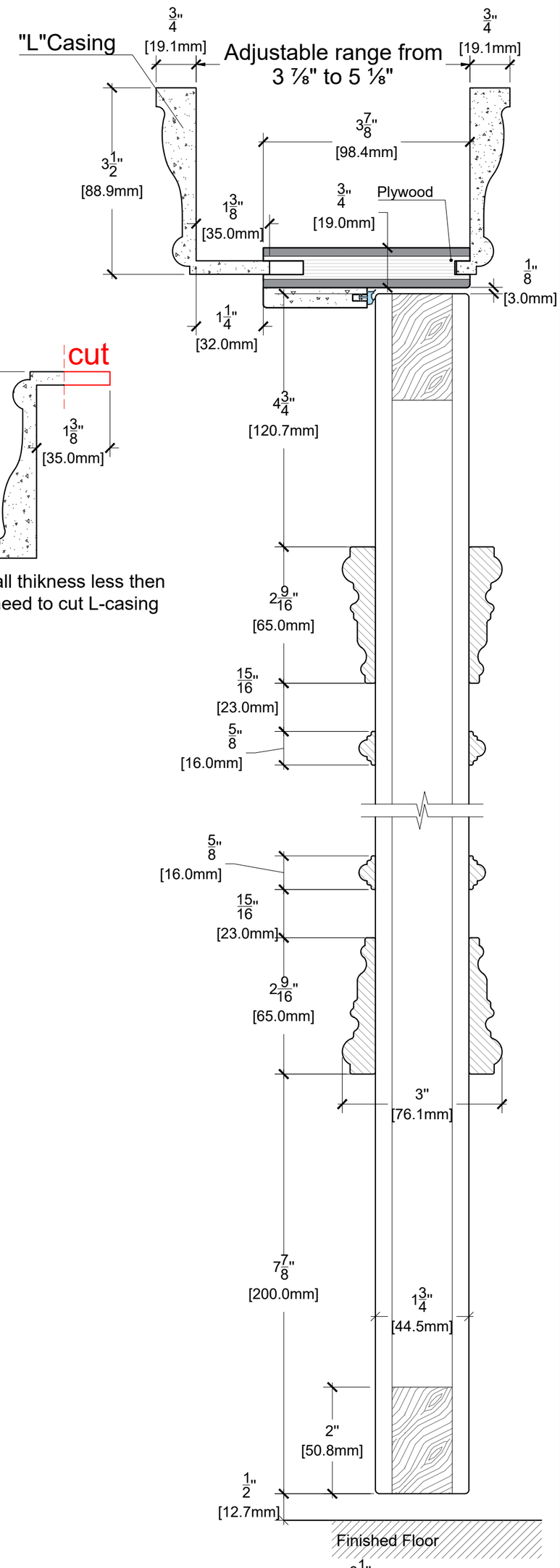

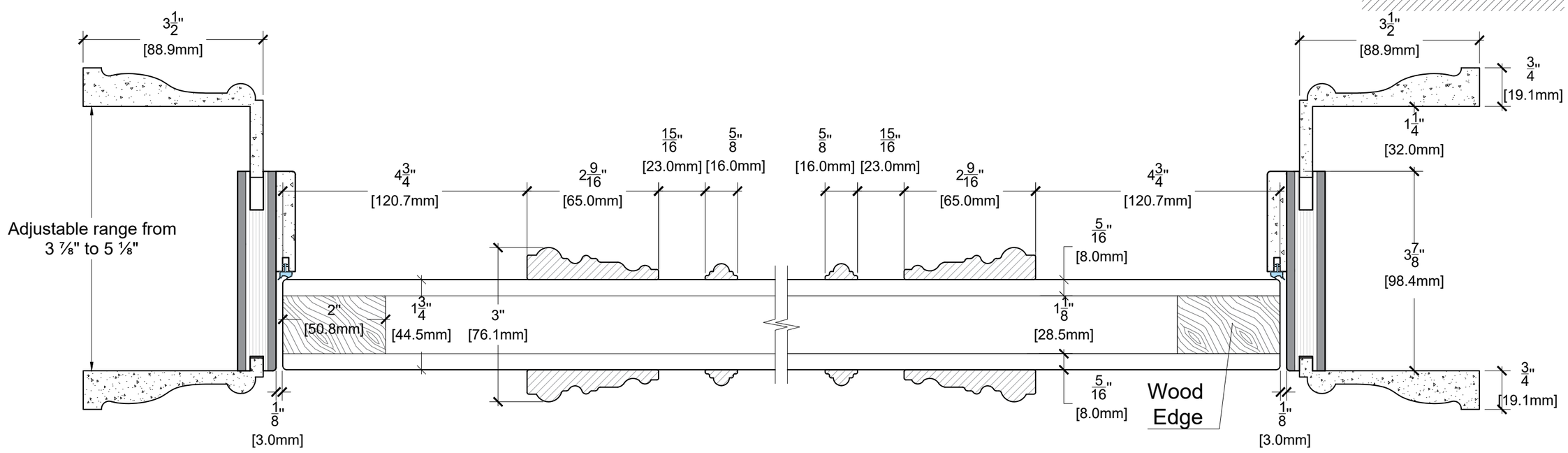

ALMES DOORS

Model: Palladio Tre Solid

Configuration: Swing 80"