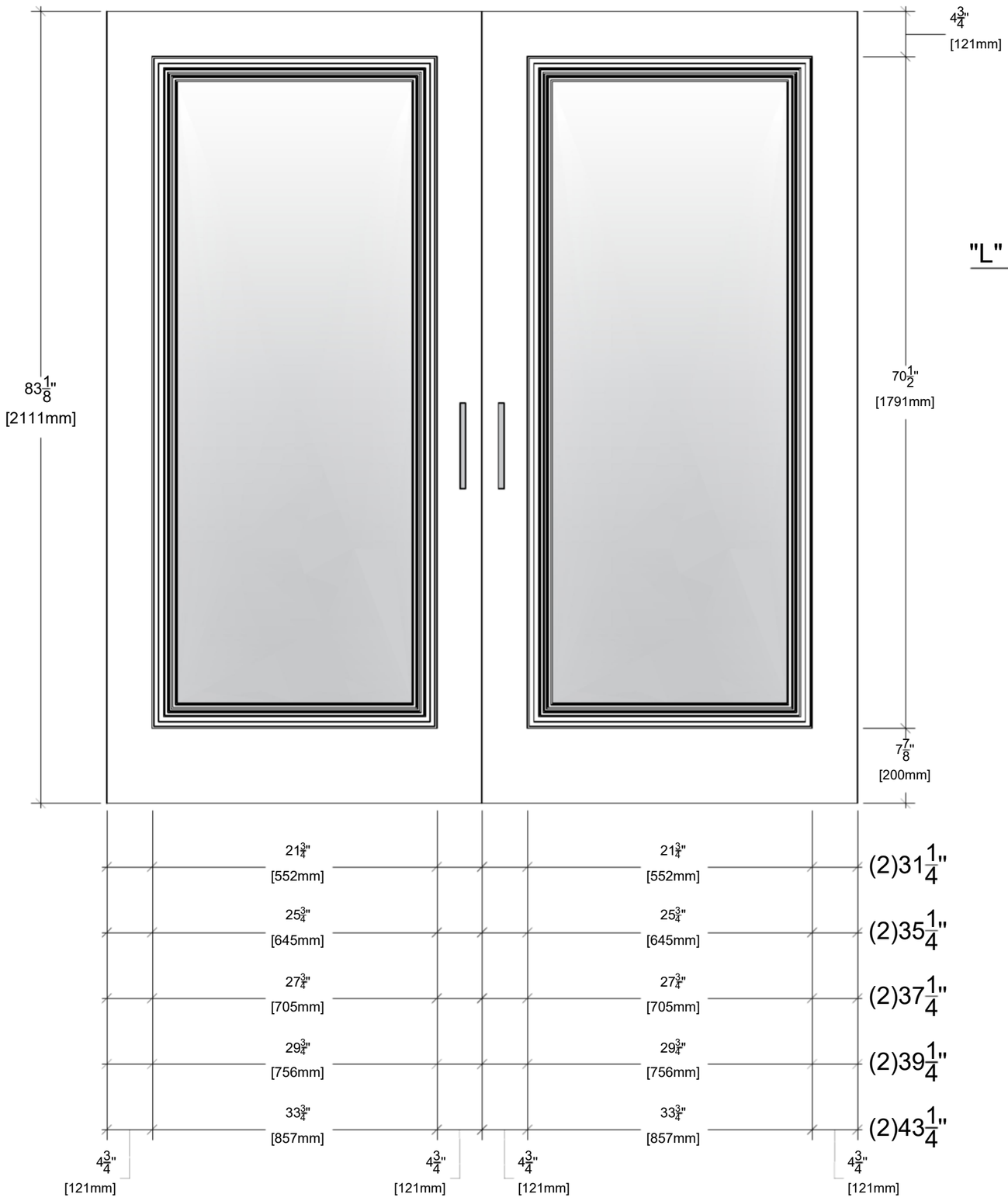

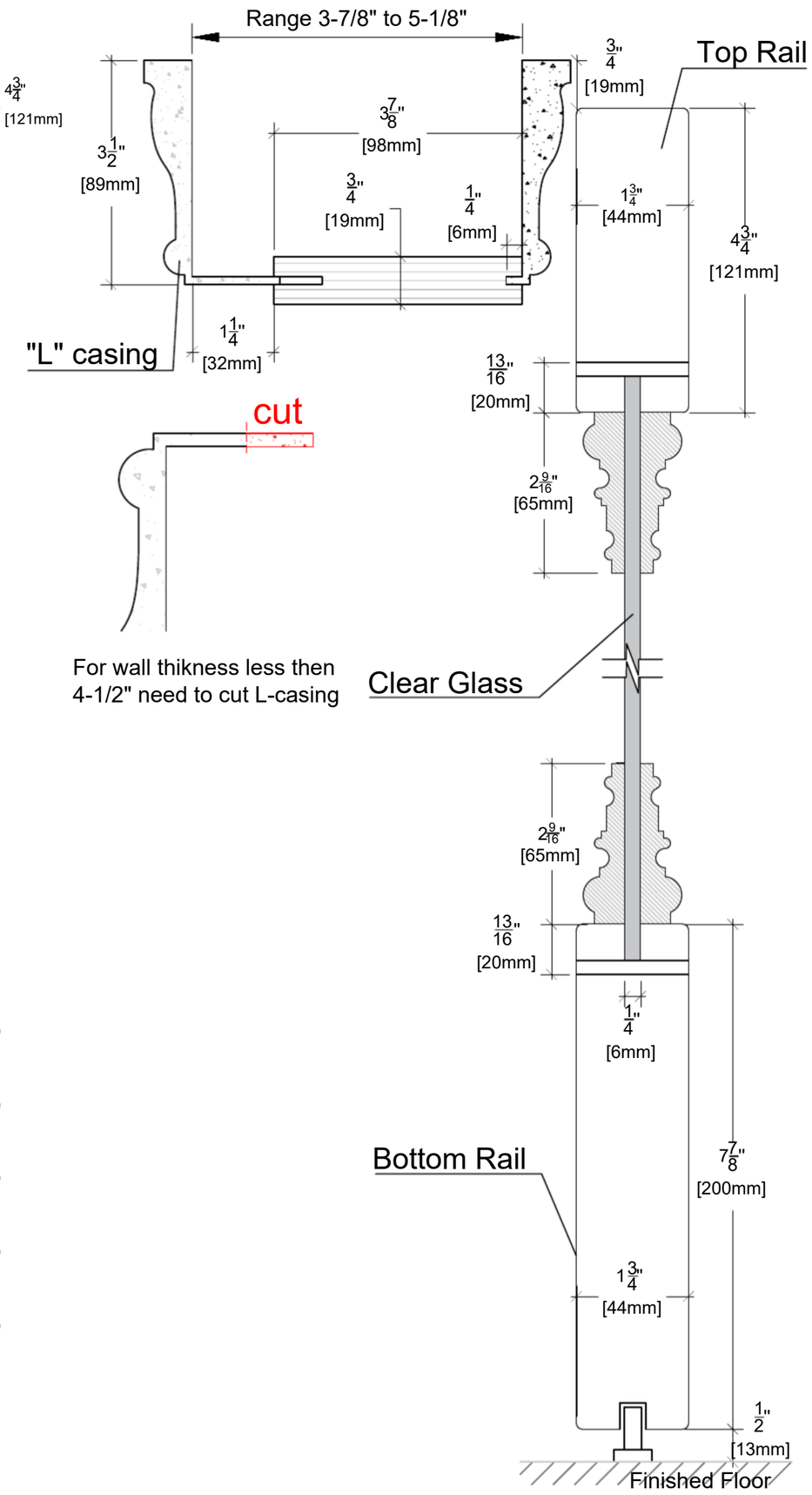

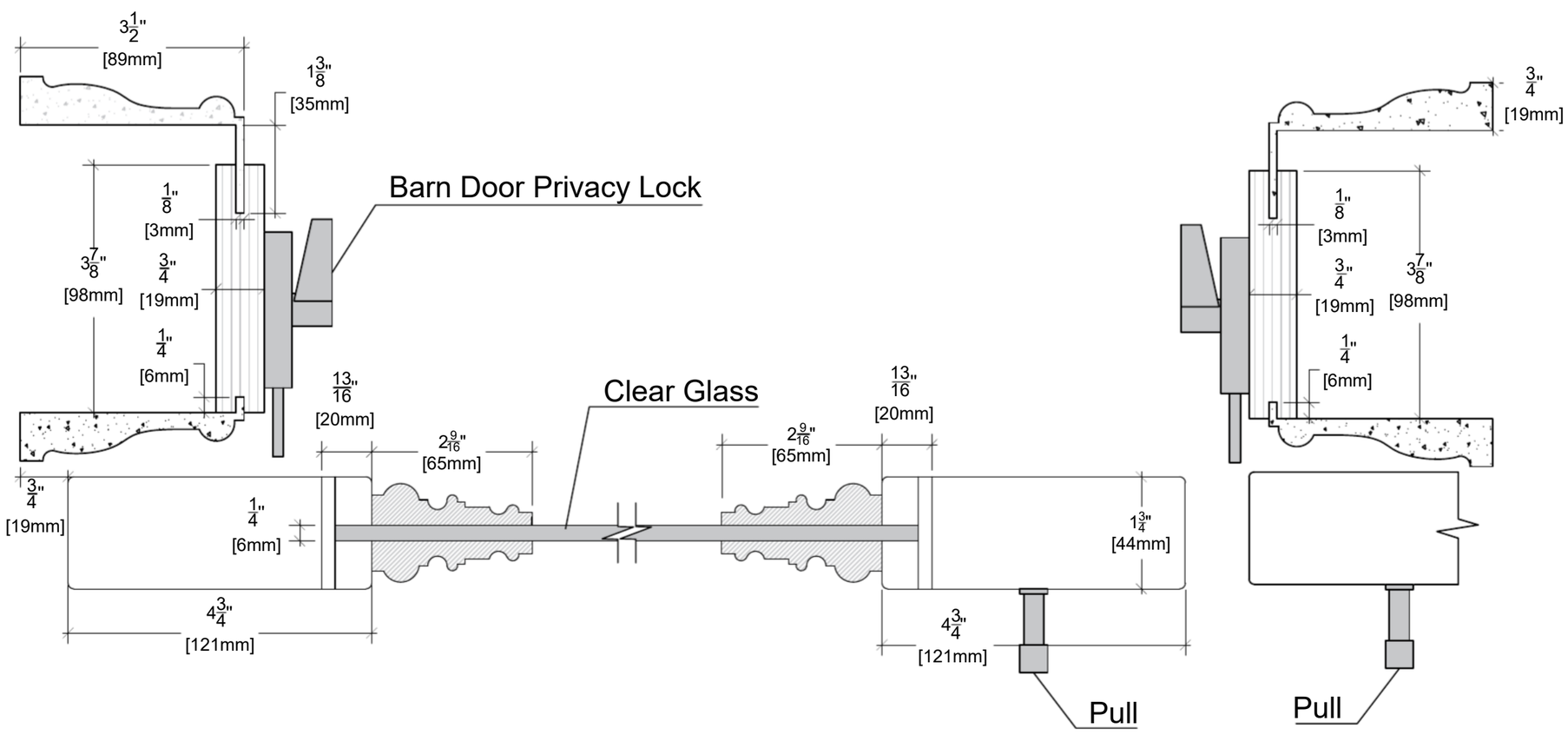

ALMES DOORS

Model: Palladio Uno Clear Glass

Configuration: D Barn 82"