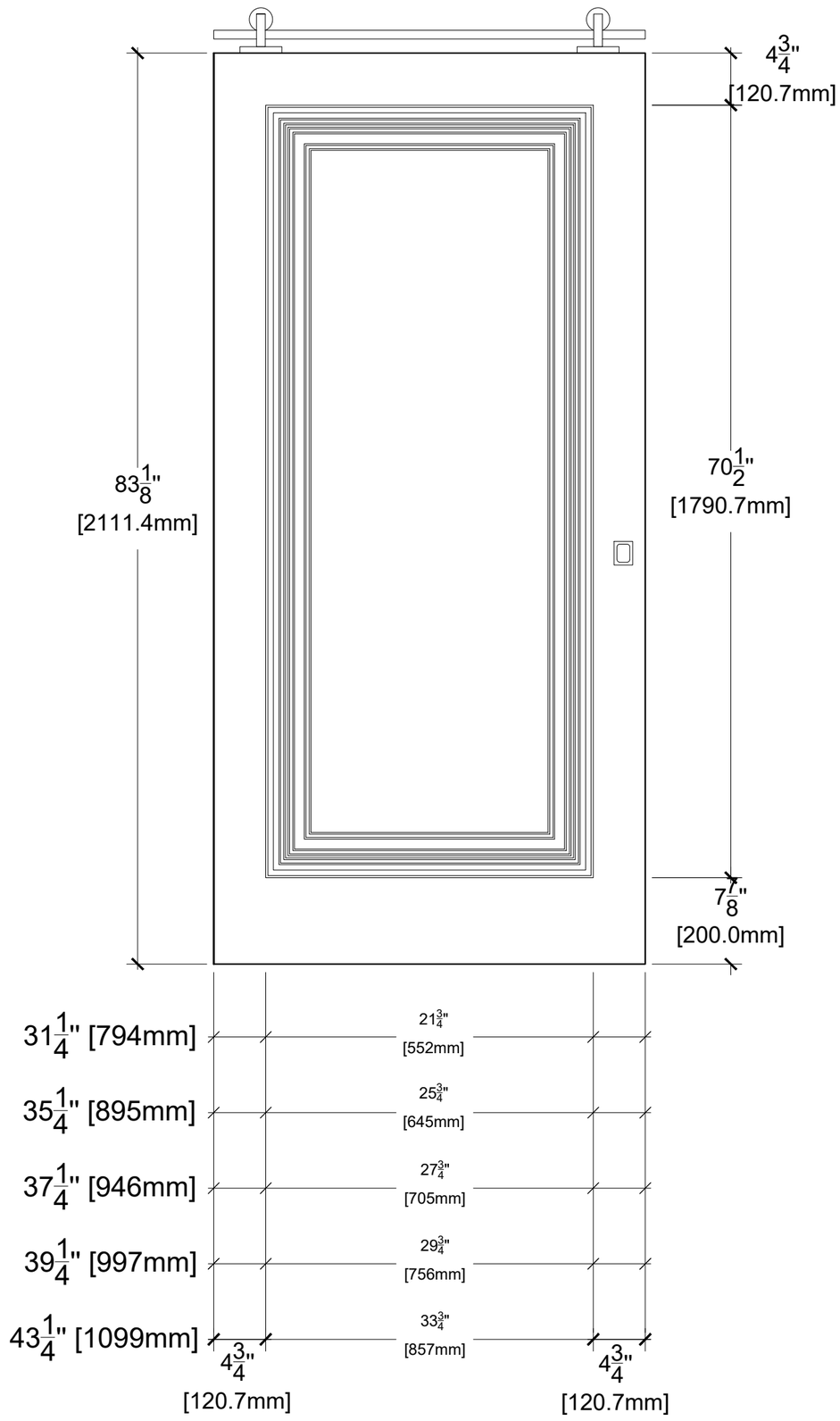

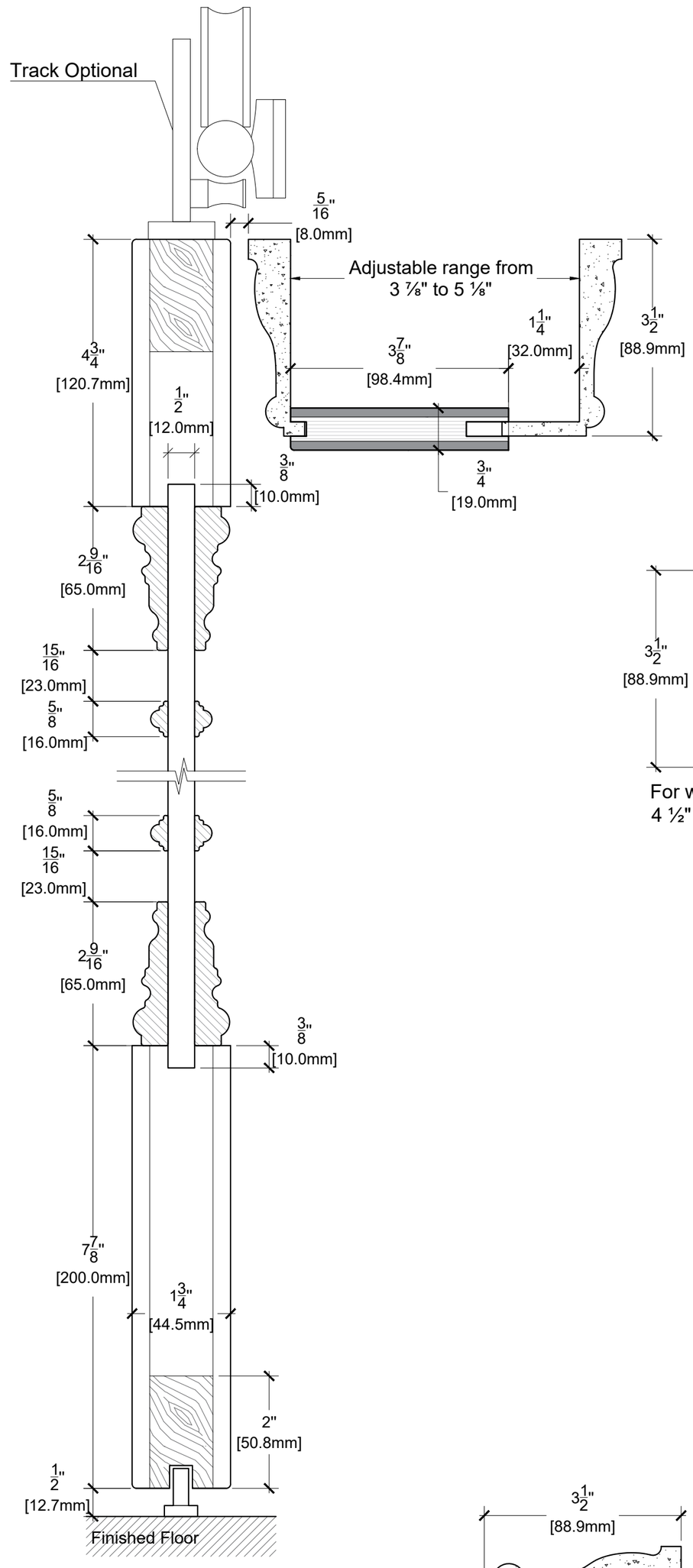

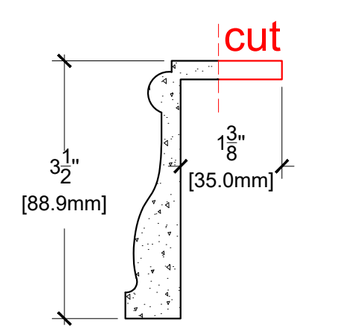

For wall thikness less then
4 ½" need to cut L-casing

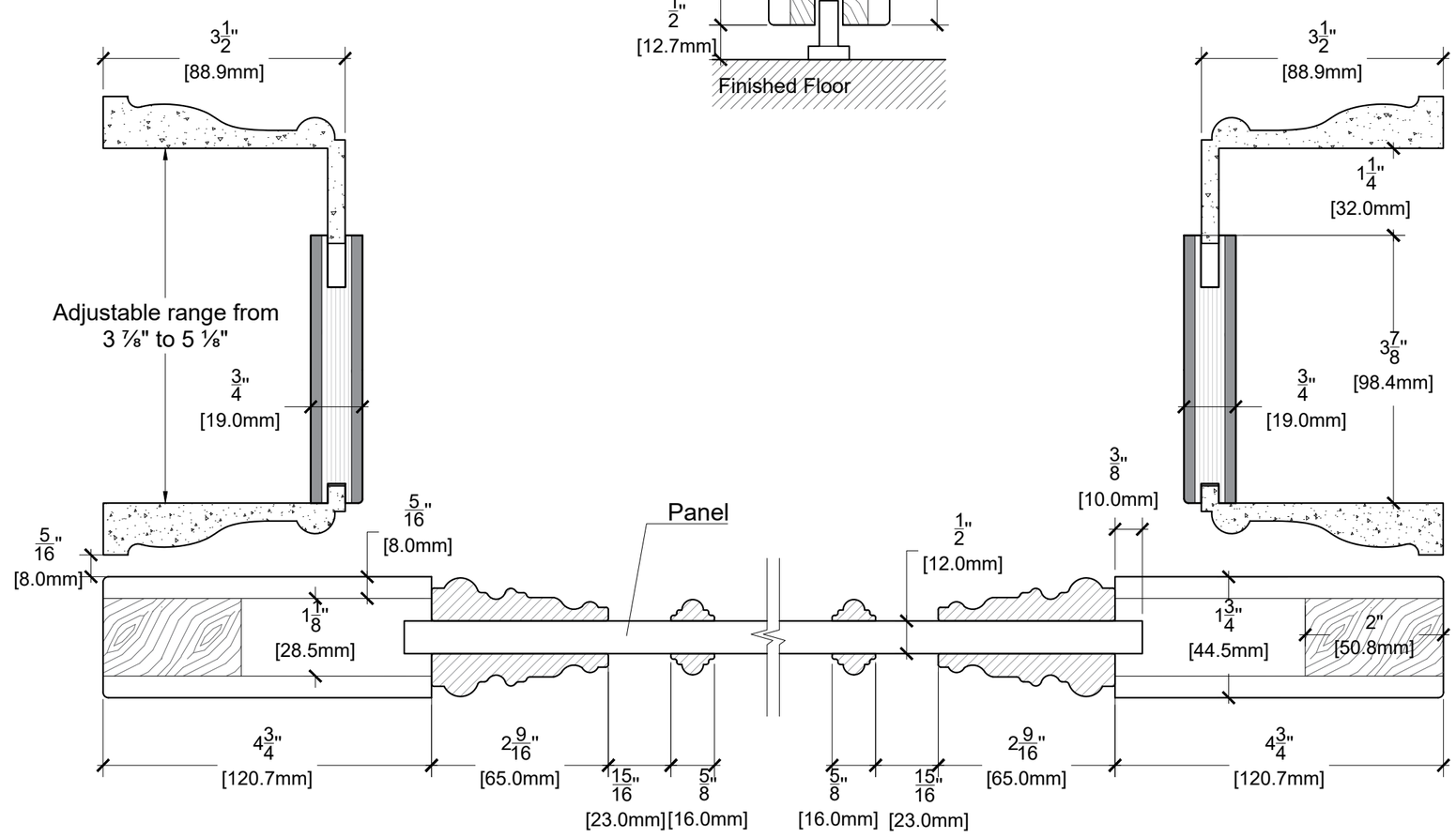

ALMES DOORS

Model: Palladio Uno Solid

Configuration: Barn 82"