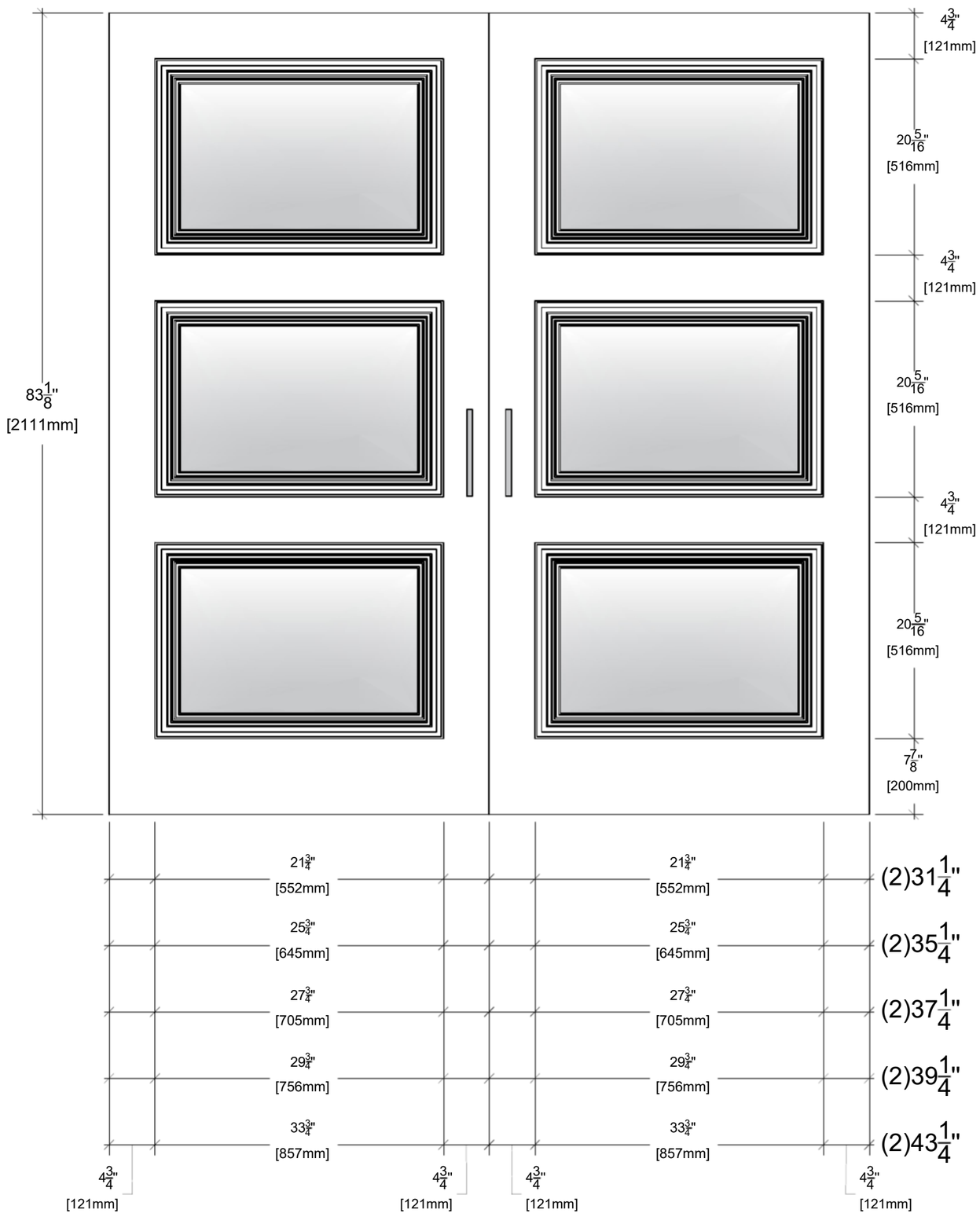

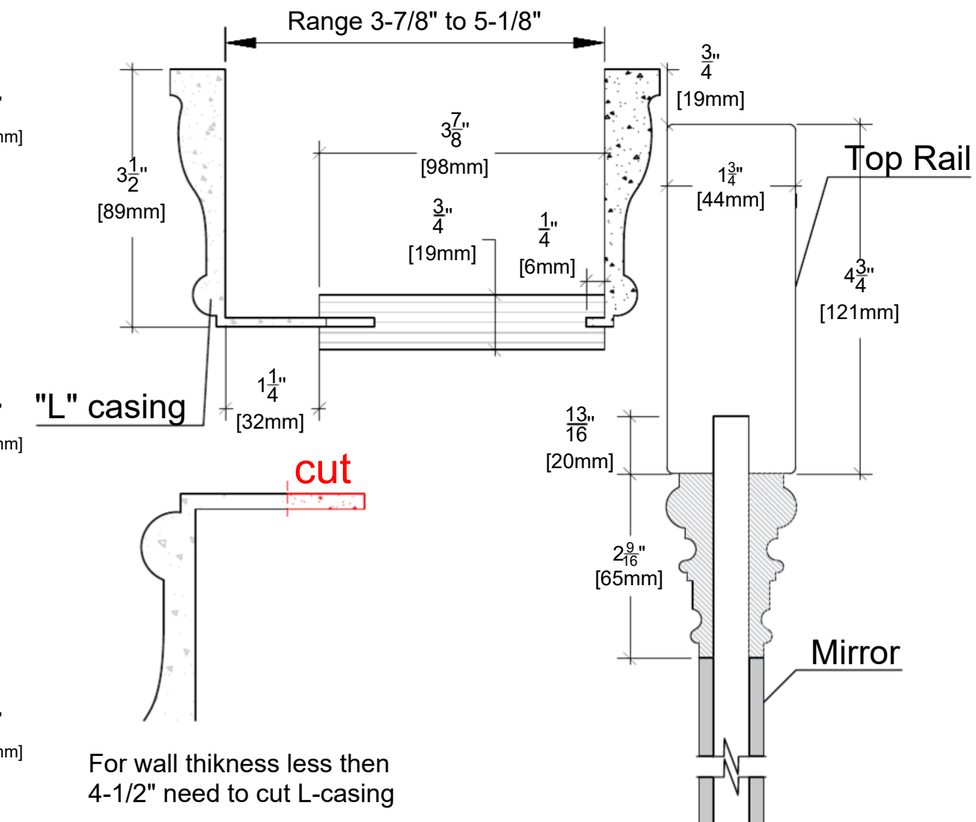

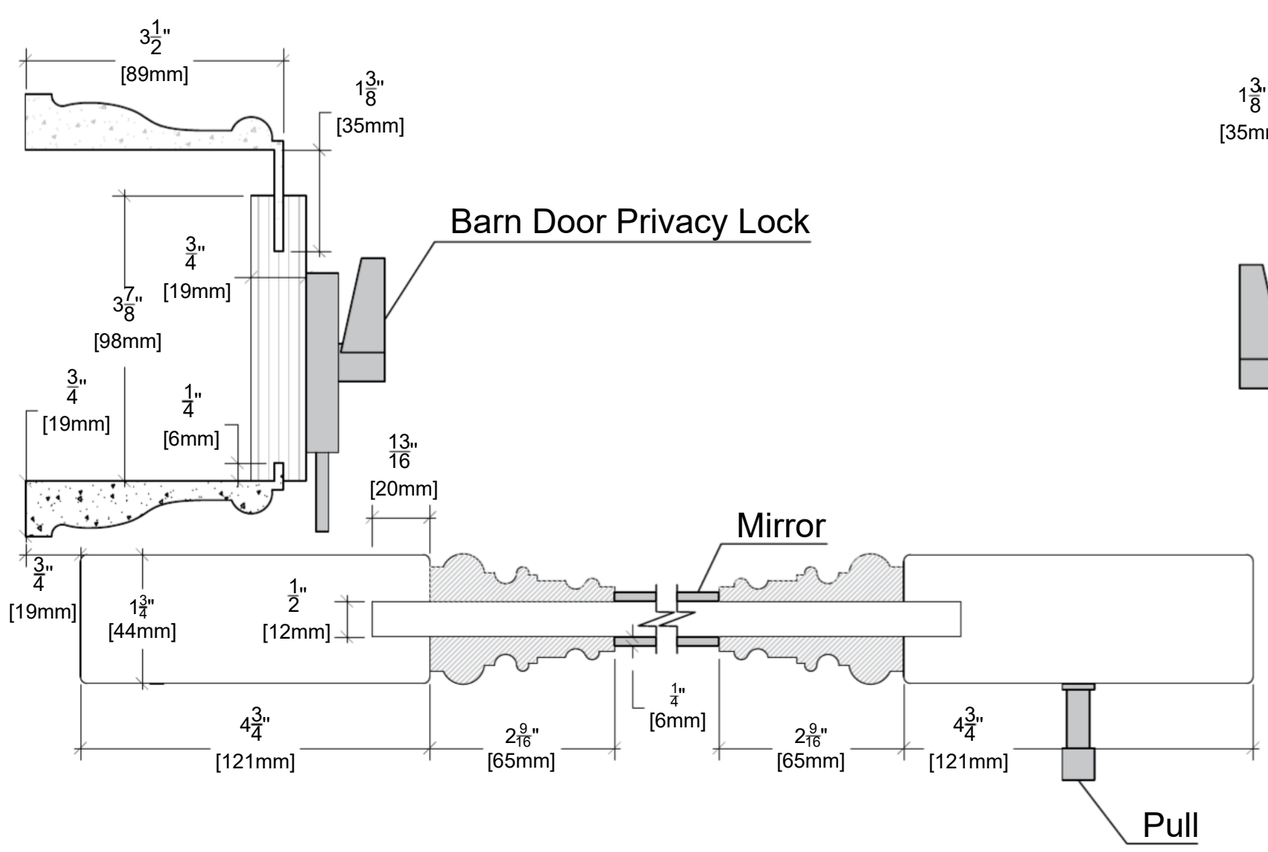

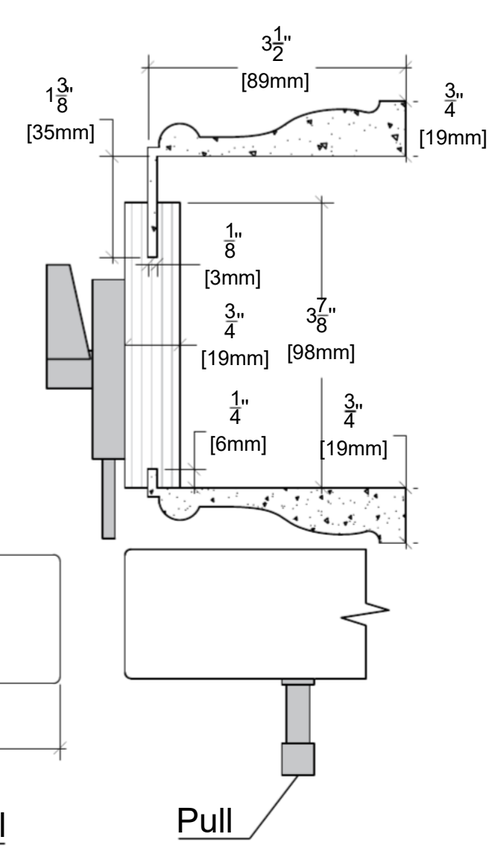

ALMES DOORS

Model: Palladio Prima Mirror

Configuration: D Barn 82"