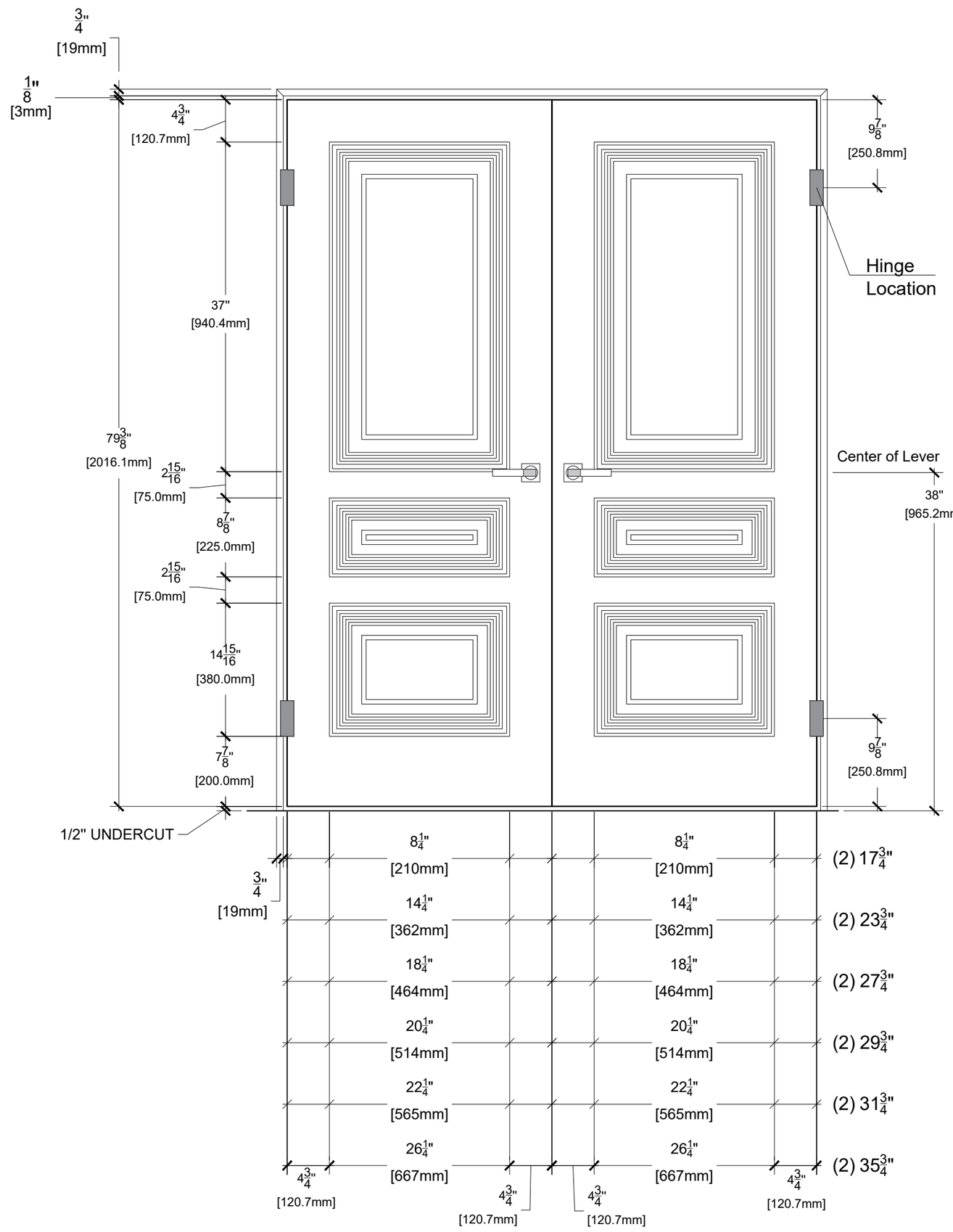

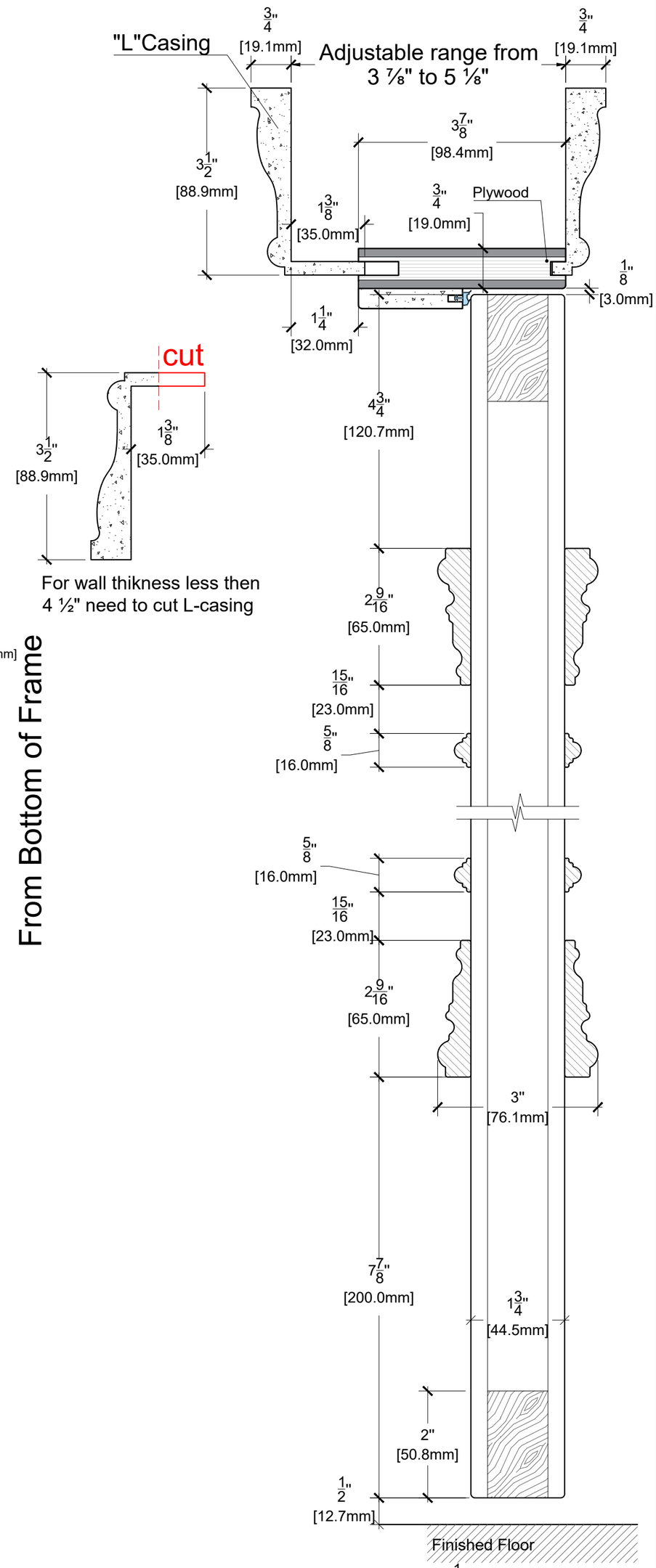

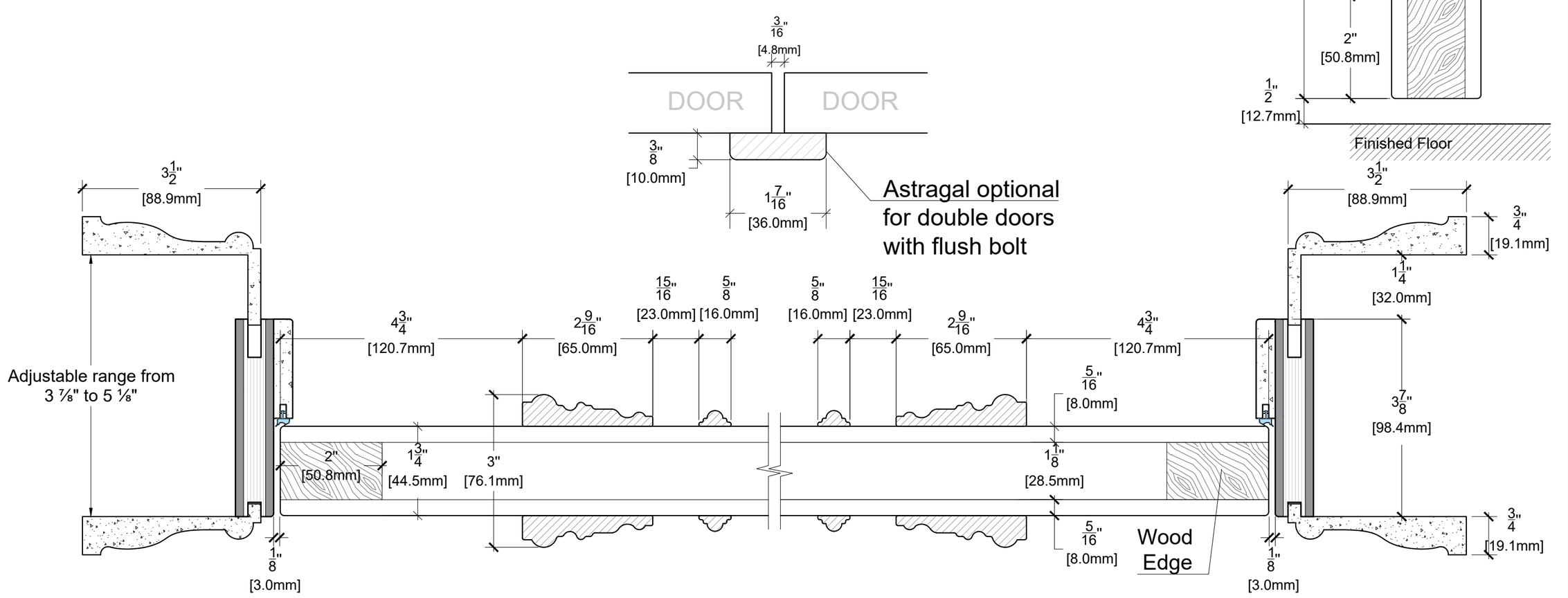

ALMES DOORS

Model: Palladio Tre Solid

Configuration: D Swing 80"