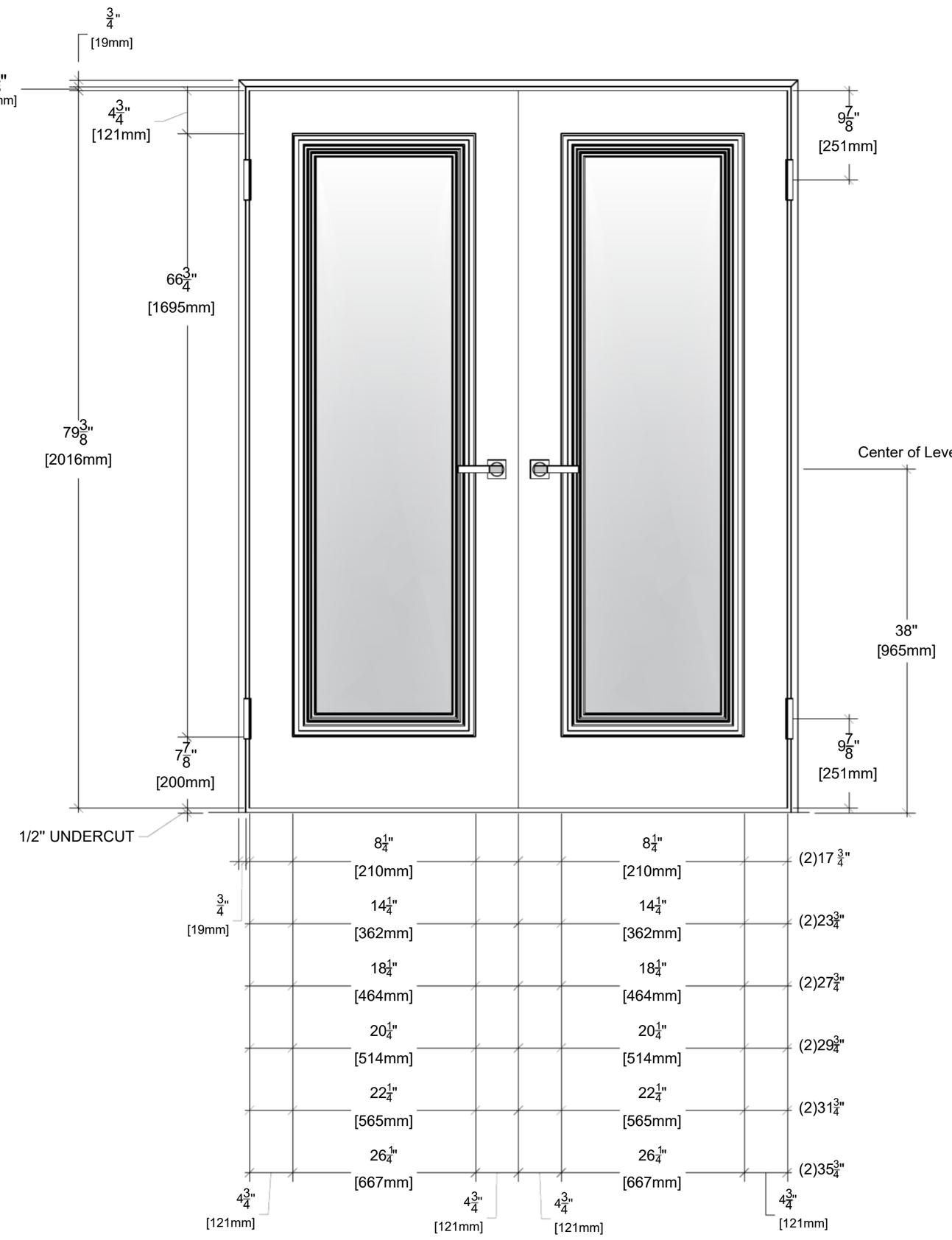

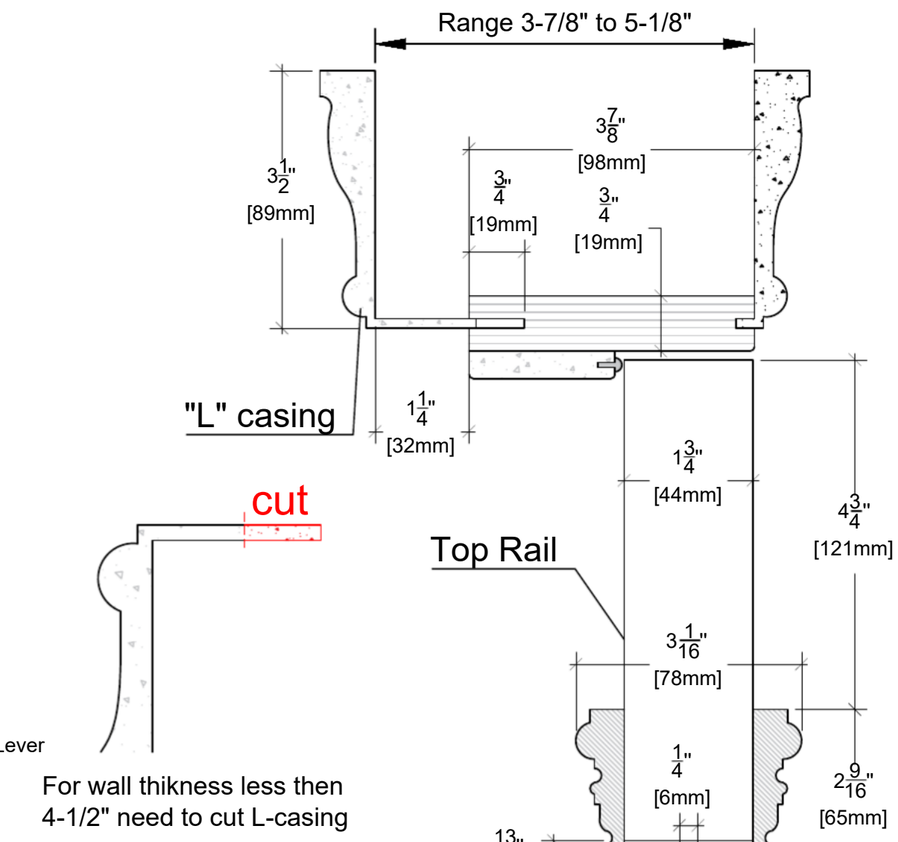

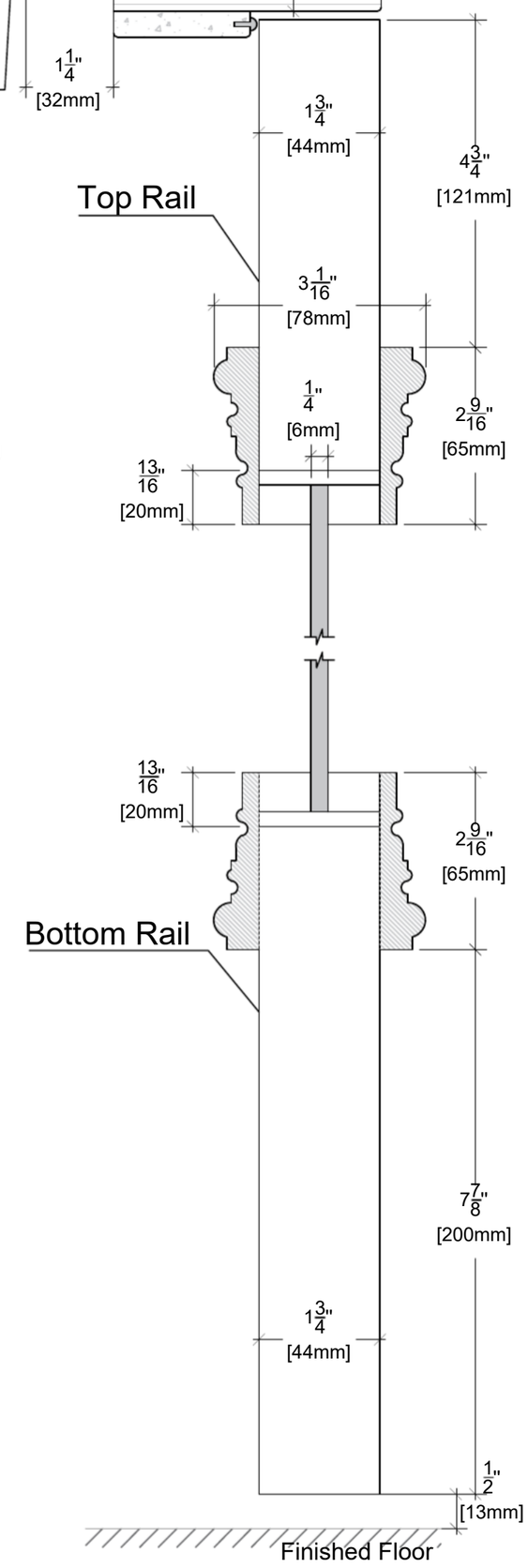

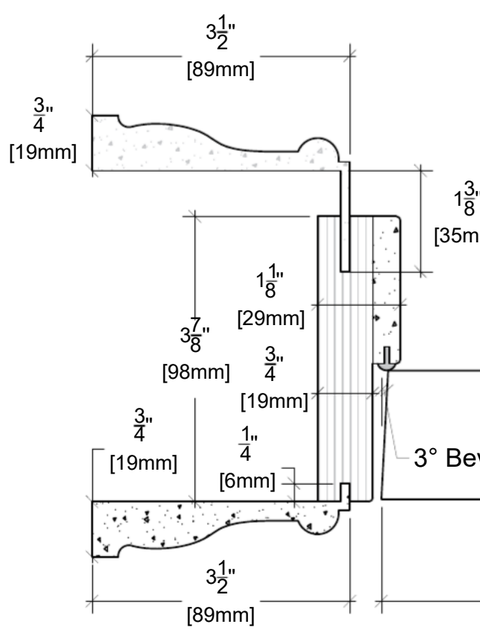

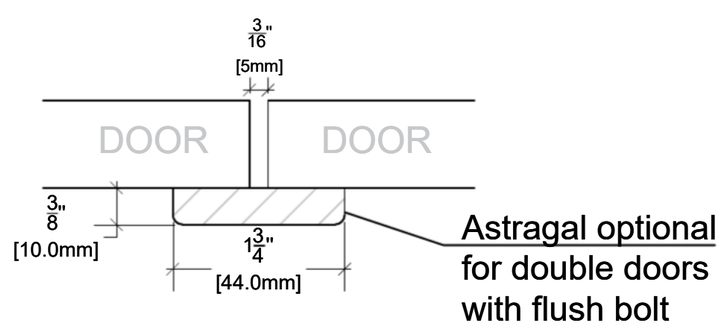

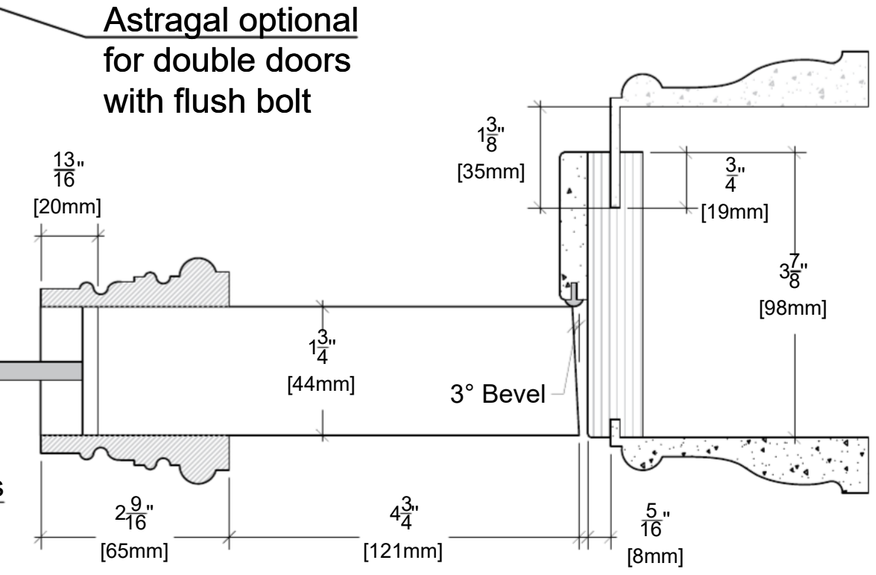

ALMES DOORS

Model: Palladio Uno Clear Glass

Configuration: D Swing 80"